PHOTOVOLTAIC COMPONENTS & SOLUTIONS

CATALOGUE
OF PHOTOVOLTAIC
COMPONENTS AND SOLUTIONS

5 years WARRANTY

VALID FROM 1ST APRIL 2022

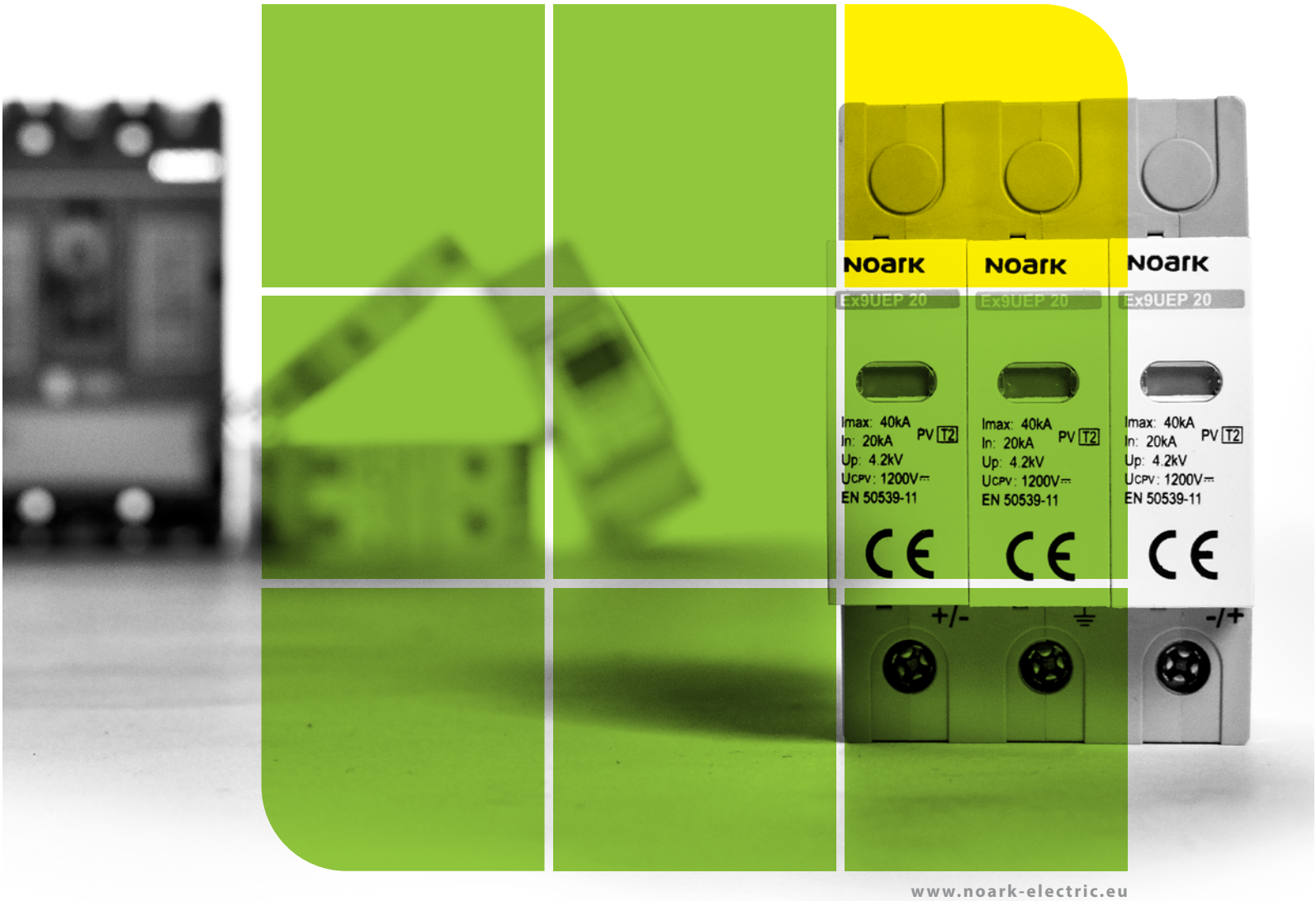

www.noark-electric.eu

Noark

Content

Photovoltaic applications

Ordering information

Content

Technical data

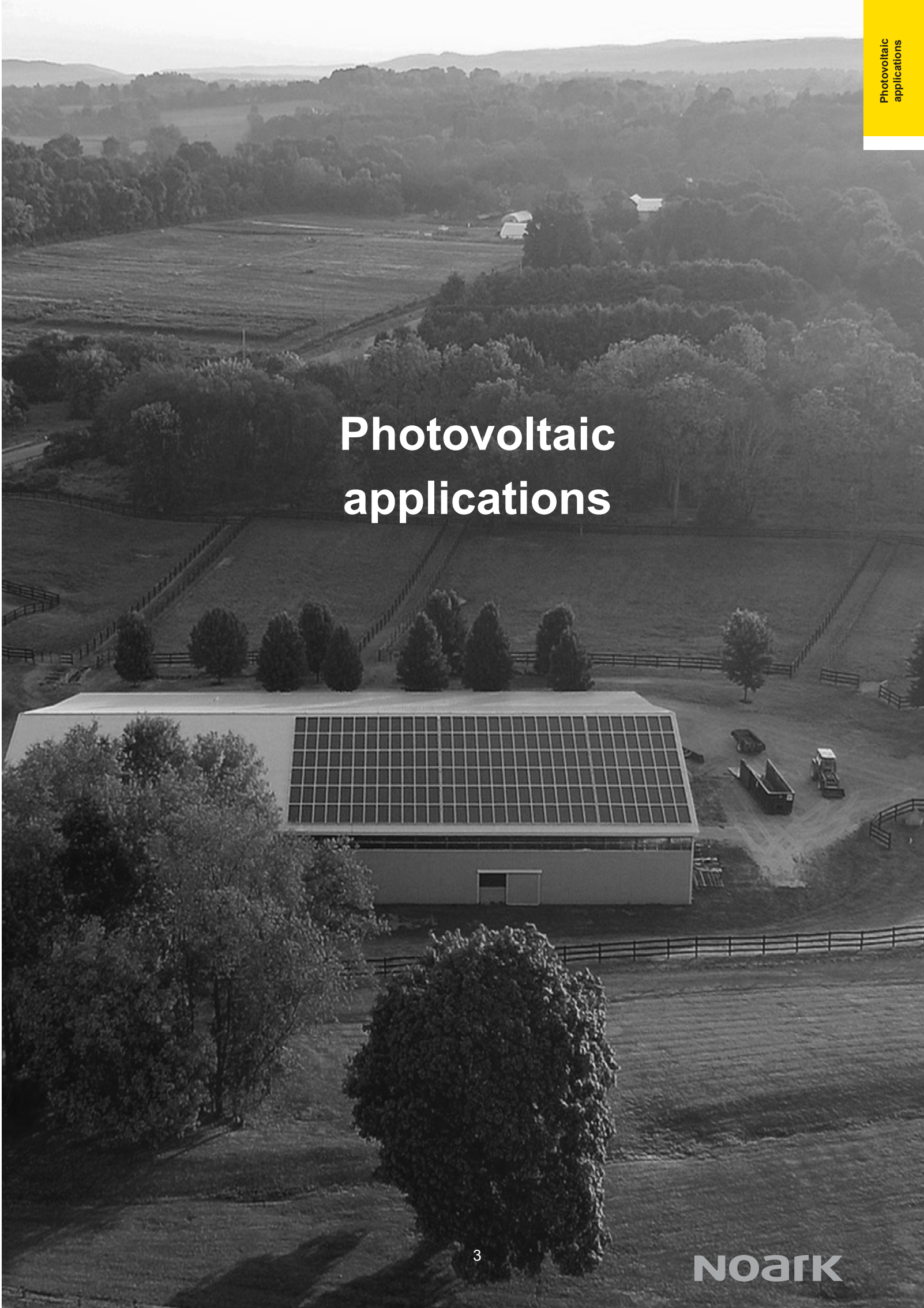

Photovoltaic applications

Content

Photovoltaic applications

Photovoltaic applications

Introduction

Photovoltaic applications have become widely used alternative source of electric energy. Because of their specific needs in comparison to other applications, they stimulated development of a new generation of DC components.

Main difference of DC part of PV installation in comparison to common DC ones lies mainly in three specific aspects:

1. The first one is related to relatively higher voltage, typically 200 – 1500 V DC. Why exactly up to 1500 V DC? In the last few years in the construction of photovoltaic power plants, architectures with 1500 V DC have quickly been adopted and have become standard. The move to higher string voltages results in a significant reduction in the number of source circuits, combiner boxes and electrical equipment needed. Furthermore, there are no intentions to exceed 1500 V DC in the strings in the future, as it wouldn‘t be cost-efficient.
2. Another follows from the fact that short circuit current of a PV panel is very close to its nominal value.
3. The last and probably the most important one is changing of polarity of DC current on a breaker or switch during faulty operation in comparison to standard operational regime.

All these three issues bring completely new requirements on design, constructionand operation of DC components like circuit breakers or switches.

Basic principle of PV systems

PV systems can be divided with respect to several parameters. The fundamental division is related to connection of such power station to a (public) grid system. There are three types of solutions, plants connected to a grid, so called off grid ones and hybrid. From the technology point of view, there is hardly any distinction at DC side of both types (the only one can be in requirements for grounding of the systems). Main difference is in inverter converting DC current to AC current. The off grid solutions are also typically equipped with a battery system to store energy which cannot be consumed immediately. Hybrid solutions are combining advantages of both solutions and are also used in combinations with batteries - attractive solution for small house PV plants.

Application scheme of a home PV solution is depicted in Fig. 1 (next page).

Fig. 1 Application scheme of PV system

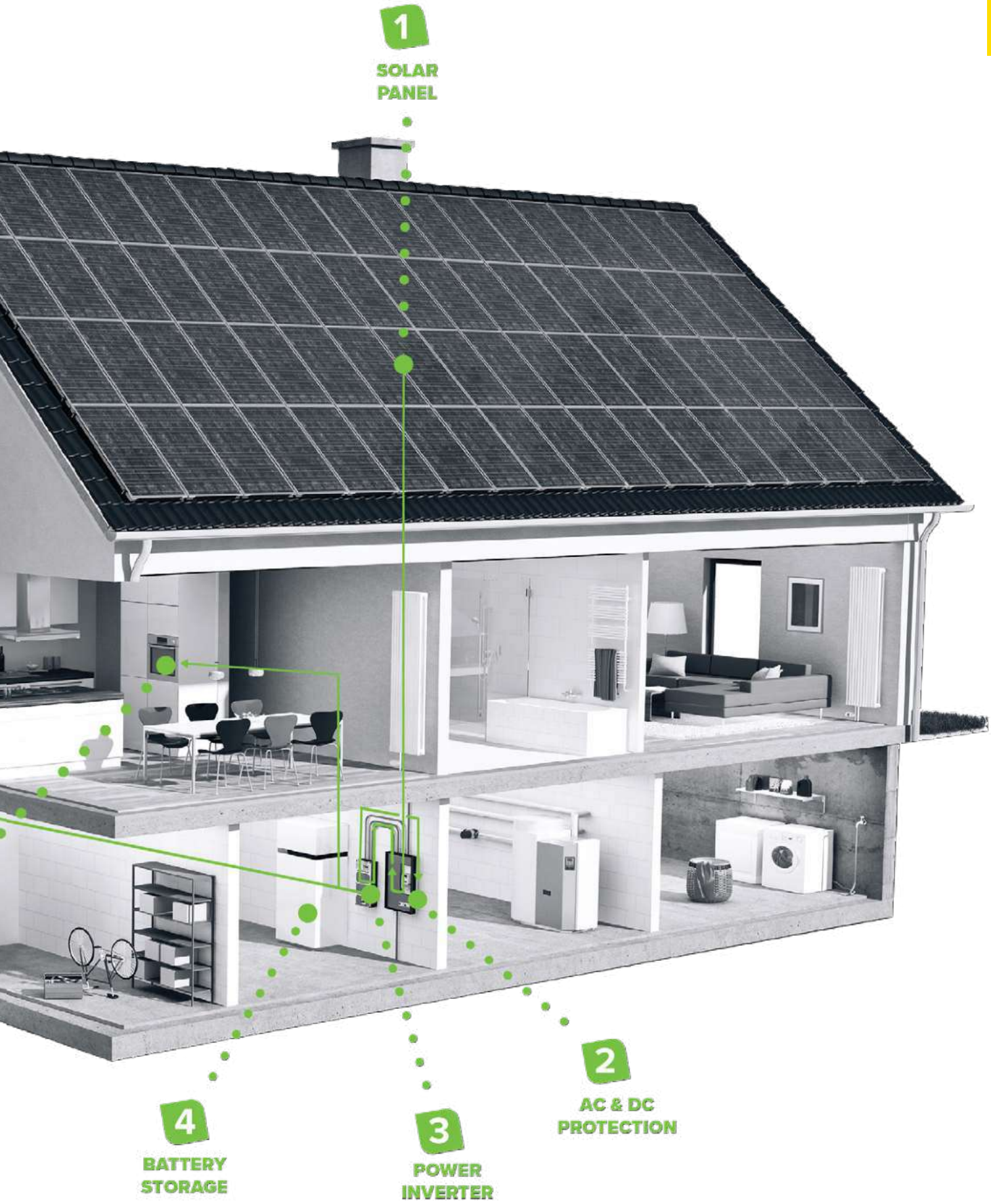
1
SOLAR PANEL
2
AC & DC PROTECTION
3
POWER INVERTER
4
BATTERY STORAGE

Photovoltaic applications

PV panels

The first essential part of any PV system is PV panels. With respect to the total installed power and other conditions, particular panels can be connected in series to so-called strings and strings in parallel (arrays). Common panels are based on polycrystalline silicon technology. This type of panels offers lowest price among the other types with very high efficiency. Another type based on crystalline slices is monocrystalline panels. Their main advantage is highest efficiency. Their price is, however, higher, but they are being used more and more frequently which will downgrade their price in future. The last and newest panel technology with standard commercial use is thin film one. The main advantages are minimum installation height and low weight, but they are less effective nowdays. New technologies of solar panels and improvements of current ones are being invented rapidly, because of the PV systems popularity.

PV panels are characterized with a set of parameters. The most important for design of a PV system are

STC rated output P_{mpp} [Wp]
Defines maximum (peak) output power (Wp) of the panel at Standard Test Conditions (STC)

Rated voltage (V_{mpp}) at STC*
Rated voltage of the panel at maximum power point (MPP) measured at Standard Test Conditions (STC)

Rated current (I_{mpp}) at STC*
Rated current of the panel at maximum power point (MPP) measured at Standard Test Conditions (STC)

Open circuit voltage (V_{OC}) at STC*
Output voltage of the panel with zero output current definedfor Standard Test Conditions (STC), equal to maximum voltage at STC

Short circuit current (I_{SC}) at STC*
Short circuit current of the panel defined for Standard Test Conditions (STC), equal to maximum output current of the panel at STC

Maximum system voltage SCII
Maximum possible voltage of the system in which the panel can be used, limits maximum voltage of a string

Maximum series fuse rating
Defines maximum back up fuse rating to avoid overload of inverse current blocking diodes and current carrying paths

Photovoltaic applications

Standard Test Conditions STC

Defines industry standard for the conditions under which a solar panel are tested. By using a fixed set of conditions, all solar panels can be more accurately compared and rated against each other. There are three standard test conditions which are:

1. Temperature of the cell – 25°C
   The temperature of the solar cells themself, not the ambient temperature
2. Solar Irradiance – 1000 W/m^2
   Refers to the amount of light energy falling on a given area at a given time.
3. Mass of the air – 1.5
   This parameter can misleads, because it refers to the amount of light that has to pass through Earth's atmosphere before it can hit Earth's surface, and has to do mostly with the angle of the sun relative to a reference point on the earth. This number is minimized when the sun is directly above as the light has to travel a minimum distance straight down, and increases as the sun goes farther from the reference point and has to go at an angle to hit the same spot.

Photovoltaic applications

Inventers

The last part of the system at its DC side is DC/AC inverter. It is responsible for conversion of DC current to AC one. Inverters can be sorted based on input and output power, number of output phases, type of the system they are suitable for – grounded or ungrounded, grid connected and off grid one. Main inverter parameters necessary for PV system design are

Maximum input DC Voltage
Maximum voltage of connected string given as sum of V_{OC} of all panels

MPPT Voltage Range
Range of voltages to which MPP (Maximum Power Point) Tracker can set DC working voltage of connected string to maximize its output power

Maximum input DC Current
Maximum DC current of connected strings given as sum of I_{SC} of all strings

Maximum DC Power
Maximum input DC power given as multiple of operational voltage and operational current of connected string(s)

Number of MPP Trackers
Independent MPP trackers allow optimize setting of operational maximum power point of strings separately

Number of inputs per MPP Tracker
Number of input positions, typically connectors linked to one MPP tracker

Maximum DC current per input/tracker
Maximum current of inverter input

Output Power
Maximum AC power from inverter

Grid Voltage
Range of voltages of grid which the inverter can be connected to

Number of phases / AC connection
Defines AC output, typically 1phase or 3phase

Photovoltaic applications

Current protection of DC part of PV systems

The second block of a PV system belongs to protective and control components. This part typically consists of current protection (circuit breakers, fuses), switch disconnectors, surge protective devices. In large PV applications, there can be used also some monitoring or measuring system. Real configuration depends on a size of the system, a number of strings and arrays, or other specific requirements. This block is usually installed in a special DC board (string box, combiner box, array box, junction box), or for large systems it can be a part of the central inverter.

Arrays of strings may require another level of protection, so-called group breaker. The intention of the group breaker, i.e. a protective device which is used downstream to combiner or junction box, is just protection of the cables and devices in the box against overload. In typical applications it serves also as the main disconnector of the DC part from an inverter. DC circuits of larger systems can by typically split into several parts like string protection boxes, combiner boxes, or an array (junction) box, see Fig. 4.

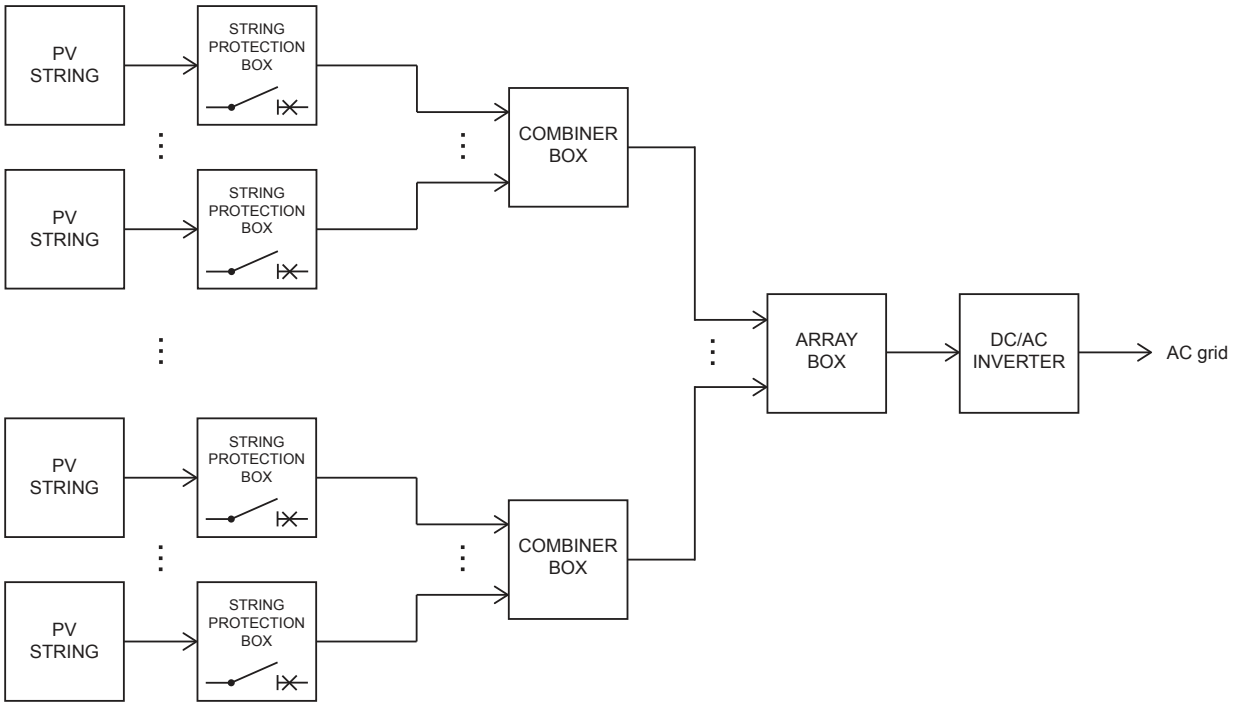

Fig. 4 A large PV system with split functionality of DC protection into string protection boxes, combiner boxes and array box.

String protection boxes contain short circuit and overload protection of strings. Usually miniature circuit breakers or fuses are used for this function. Main role of a combiner box is to combine DC current of parallel strings. There can be done simple junction of input paths. This point is also typical place of installation of surge protective devices. Output of a combiner box is either equipped with a group protection (miniature or moulded case circuit breaker), or if protection is not necessary with a group switch disconnector. Systems for monitoring of a PV plant are also usually built in in a combiner box. Array boxes are used in very large PV systems with central inverters. Their role is similar to combiner boxes. Functionality is limited just to collection of DC currents from combiner boxes and protection of connecting cables. One array box is connected to one input of inverter (there can be single input inverter, parallel input inverter, or multi MPPT inverter used). Array box can also be integrated directly into inverter boards.

For smaller and mid size systems, all functionalities can be integrated in a single DC board. Very often there are joint string protection functions with combiner box ones in small systems.

Photovoltaic applications

Other current protections of Photovoltaic panels

In the previous section there is described protection against consequences of short circuitry caused by a broken PV panel or string. Panels themselves need to be protected against currents as well. The problem, which can cause their damage, is reverse currents. Particular diodes in the panels are not able to lead any significant current in their direct polarization. It can happen simply when more strings are connected in parallel with slightly different output Voltage. Lower Voltage of a string can be caused also due to breakdown of some PV diode(s) in the string. If there is no protection, all PV diodes in panels in the string can be destroyed.

Protection against the reverse currents is simple. In parallel to the panel, there is connected standard power diode with the same polarization as PV diodes of the panel, see Fig. 5.

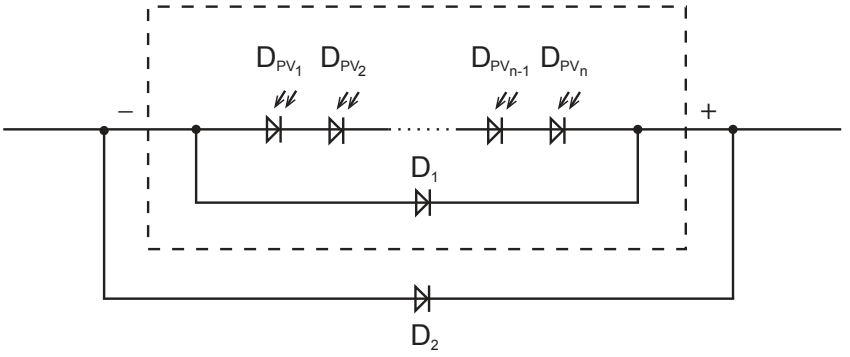

Fig. 5 Diodes to lead the reverse current of a PV panel out.

In case of a current in direct polarization, it flows through this diode (its open Voltage is lower than open Voltage of the serial combination of PV diodes in the panel). All modern polycrystalline and monocrystalline PV panels have such protection diode(s) integrated (D1 in the Figure). Maximum series fuse rating of a panel is defined also and mainly with respect to this protective diode(s). Thin film based PV panels usually do not contain such diode and thus need external protection (D2 in the Figure).

Photovoltaic applications

Blocking diodes could be designed also as a protection in case of short circuitry caused by electric breakdown of a string. The situation is illustrated in Fig. 6.

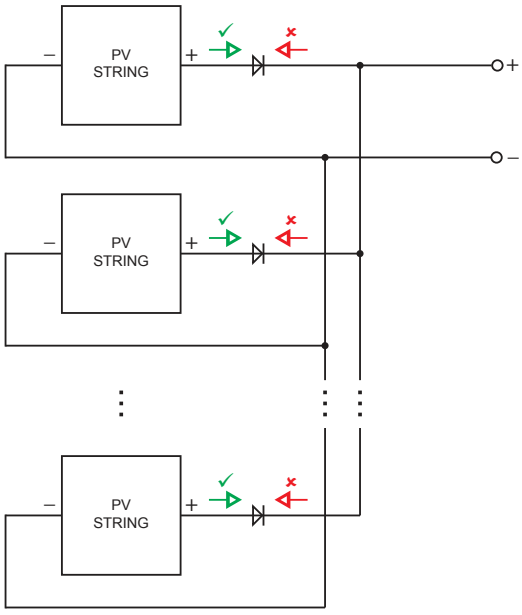

Fig. 6 Inappropriate protection against short circuitry by means of serial blocking diodes.

This type of protection is theoretically possible due to polarity change of the normal current and short circuit one. Such protection is designed if the price of the protection is the main criterion for design. As it is described below, such design does not fulfill requirements of IEC 62548-1. The main problem of this solution follows from the fact that application limits of these blocking diodes and PV diodes in panels are very similar. As a result, there is very high probability that blocking diodes will be brokendown in the same time as the diodes in the panels and the protection will not work. There should not be mixed blocking function of the diodes against reverse currents and protection against short circuit currents.

External blocking diodes are used in combination with thin film panels. They have also their use in large PV systems where they serves for blocking of inverse currents among arrays, where there are necessary higher currents diodes then those integrated in the panels. Another application is in connection with battery storage systems to block reverse current flowing to panels from the batteries.

Photovoltaic applications

Change of polarity of current in PV applications

Very important phenomena connected mainly with PV applications is possible change of polarity of DC current through the short circuit protective device or disconnector. In most of the standard DC applications, polarity is given by the source and remains unchanged. In PV applications with two or more strings connected in parallel, the situation is different. For the sake of brevity, let us take a case with just two strings into a consideration. Standard operation is depicted in Fig. 7.

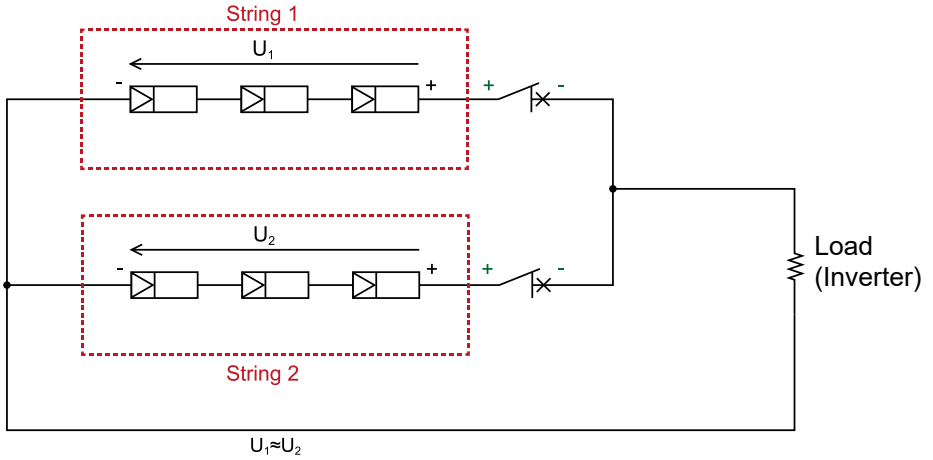

Fig. 7 Two strings in parallel during standard operation.

Polarity at circuit breakers is given by the polarity of the source, i.e. the PV strings. Situation dramatically changes in case of electrical breakdown of one string (or even one panel in the string). The circuit breaker connected to the broken string operates with opposite polarity now, see Fig. 8.

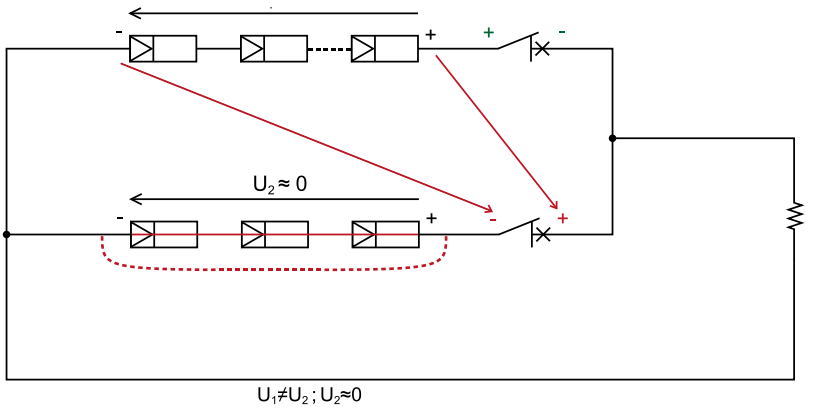

Fig. 8. Two strings in parallel in case when one is electrically brokendown.

Photovoltaic applications

It is important to note, that just this circuit breaker connected to the brokendown string should be tripped during the short circuitry. The same situation is also valid for a group circuit breaker protecting whole array in parallel array configuration. In other switching applications (ON and OFF operations with strings) or tripping of overload, the current polarity is given by the panel. This fact brings a new requirement on DC devices for PV in comparison to general DC applications. All such devices and theirs functionality must be polarity independent.

Similar situation is in circuit breakers protecting a battery storage system, where there is one current direction in case of charging of batteries and the other in the consumption regime. This situation is shown in Fig. 9.

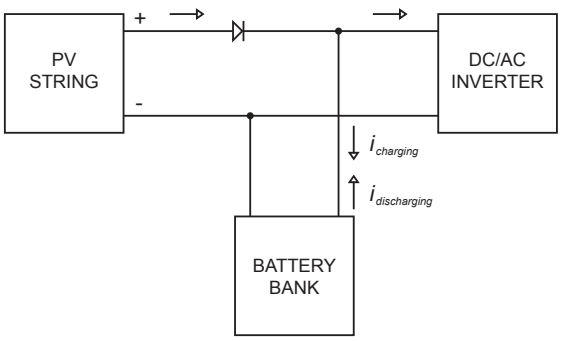

Fig. 9 Change of current direction for charging and discharging of battery storage system.

Switching and tripping of DC currents

Tripping of DC currents is much more complicated process in comparison to AC case. In AC situation, the arc between two parts of contacts can be simply interrupted when reaching zero value. This is not the case of DC. From this it follows higher requirements on tripping mechanism, its force, speed etc. The situation in PV applications is else complicated by the fact that Voltage can be typically up to 1000 V DC.

The most challenging issue for R&D engineers is distribution of the arc on the both parts of the contact. In AC case, the distribution is symmetrical between the parts. For DC circuit, it is different. The arc distribution is about 70% for one part (connected to positive pole) and 30% for the other part of the contact. Because of the permanent polarity during switching or tripping operation, the arc plasma causes electromigration of metal ions of the contact connect to positive pole of the system (or actual current). It significantly destructs the affected part of the contact system.

Solution of the problem is relatively simple. To make the arc distribution symmetrical, magnetic field can be used. Technically it can be done by permanent magnet. Its magnetic field acts against magnetic field of the positive ions of contact material and blocks their migration. Application of a permanent magnet is a typical solution in standard DC miniature circuit breakers for general applications. Such type of circuit breakers can be identified by its given polarity. When connected in wrong way, the arc distribution would not be improved but the contrary. Magnetic field amplifies the ion migration process and thus speed up the degradation of the contact. During tripping or switching, wrongly connected breaker would be destroyed. From this it is apparent that standard polarized breaker cannot be used for PV string protection, because current has different polarity in normal operation and different when a panel or string is brokendown.

Photovoltaic applications

Protection of PV strings requires non-polarized circuit breakers and disconnectors. Especially for installation devices, the key task is to modulate the arc distribution on the contact. The polarity independence is achieved through a design using dynamic magnetic field instead of a magnetic field from the permanent magnet. The dynamic field is generated from the operational current. It guarantees that this auxiliary magnetic field changes polarity when changing the polarity of external voltage as well as current. The complexity of the structural design of this auxiliary circuit lies in the fact that the magnitude of the magnetic field depends on the value of actual current. Unlike in permanent magnets, polarity independent DC circuit breaker design demands that the shaping magnetic field has a suitable intensity, e.g. even during manual tripping of the circuit breaker through which only a fraction of its rated current flows.

One important fact must be considered for switching of DC currents. To interrupt current at higher voltage levels typical for PV applications, more contacts connected in series are necessary. By this principle there is achieved contact distance allowing breaking of the DC arc in required short time. Installation devices are designed as combination of several single pole devices, mechanically connected in parallel. Such combination looks like a multipole AC circuit breaker, theirs operational principles are, however, very different. DC breakers are electrically connected in series. For proper functionality all contacts must operate simultaneously to split tripped voltage equally among all of them. If this criterion is not met, the fastest contact is exposed to overall system voltage and can be destroyed. To ensure the proper synchronous operation, the devices have to be combined and tested in production. Absolutely wrong application is to use two separate devices in one system, see Fig. 10.

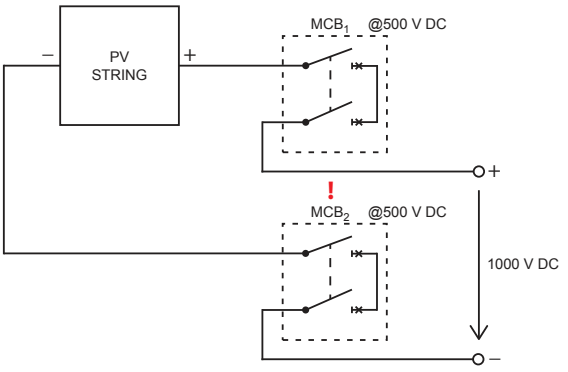

Fig. 10 Wrong application of two independent 500 V DC MCBs in 1000 V DC PV system.

Photovoltaic applications

Legislative requirements on PV systems

There are several legislative requirements on PV system, some of them are specialized in different countries. These are related mainly to inverter parameters and its connection to a grid. The rules are partly given by a local law and partly by Utility companies.

For DC part of a PV system, there are two general basic groups of requirements. The first one is covered with the Harmonized Document HD 60364-7-712 (it is identical to IEC 60364-7-712). In this document, which is adapted into local installation standards in CENELEC countries (all EU countries and some other ones), there are given main rules for PV installations with respect to their safety. As a common general requirement we can find, there is an obligation to use a disconnector in between PV panels and inverter. Especially for ungrounded systems, it is recommended to disconnect both DC poles. Drawings in this standard assume all disconnectors to be 2pole.

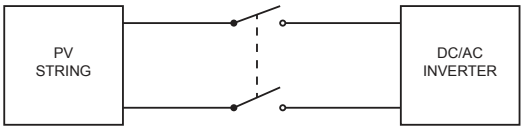

Fig. 11 Mandatory disconnection at DC side of a PV system.

Other requirements come from IEC 62548-1 standard. It handles also with design of protective devices. There is given a simple rule there, tripping current of protective device has to fall into a range from 1.4 to 2.0 of short circuit current I_{SC} of used panel. In actual design, it is necessary to calculate right with real tripping characteristics of used protective device, see the examples in previous sections of this text. An important conclusion follows from this condition. To avoid short circuitry in PV installation, a tripping protective device should be used. Blocking diodes connected in series to a string thus cannot serve as such protection.

In some countries, it is requested to have safety central off for roof top PV installation. It comes from the fact that PV panels produce electric energy when they are exposed to light. It could cause a danger situation e.g. during a fire accident when grid Voltage is disconnected from the affected building. As a solution there can be used e.g. main remote switch in the AC distribution board or undervoltage release connected to a PV panel breakers or disconnectors. The undervoltage release ensures safety disconnection even in case of some fault in the installation. Disadvantage of this approach comes from the fact that any failure of AC grid Voltage causes disconnection of the PV plant which requires manual ON operation.

Photovoltaic applications

Selection and design of PV panels

The first step of a design of a PV system is selection of panels and their connection. The electrical design is not affected by choice of the panel technology anyhow. The only exception is the fact than poly and mono crystalline panels are already equipped with diodes for blocking of reverse current, but thin film panels are not.

The selection of particular type of the panel depends on several aspects, including mechanical configuration of the power plant or inverter parameters. Let us assume that inverter can be adapted to the actual design and type of panels first. Then the panel parameters choice depends mainly on total installed power and possible physical configuration of the panels.

To collect total power, panels can be connected in series or in parallel, see Fig. 12.

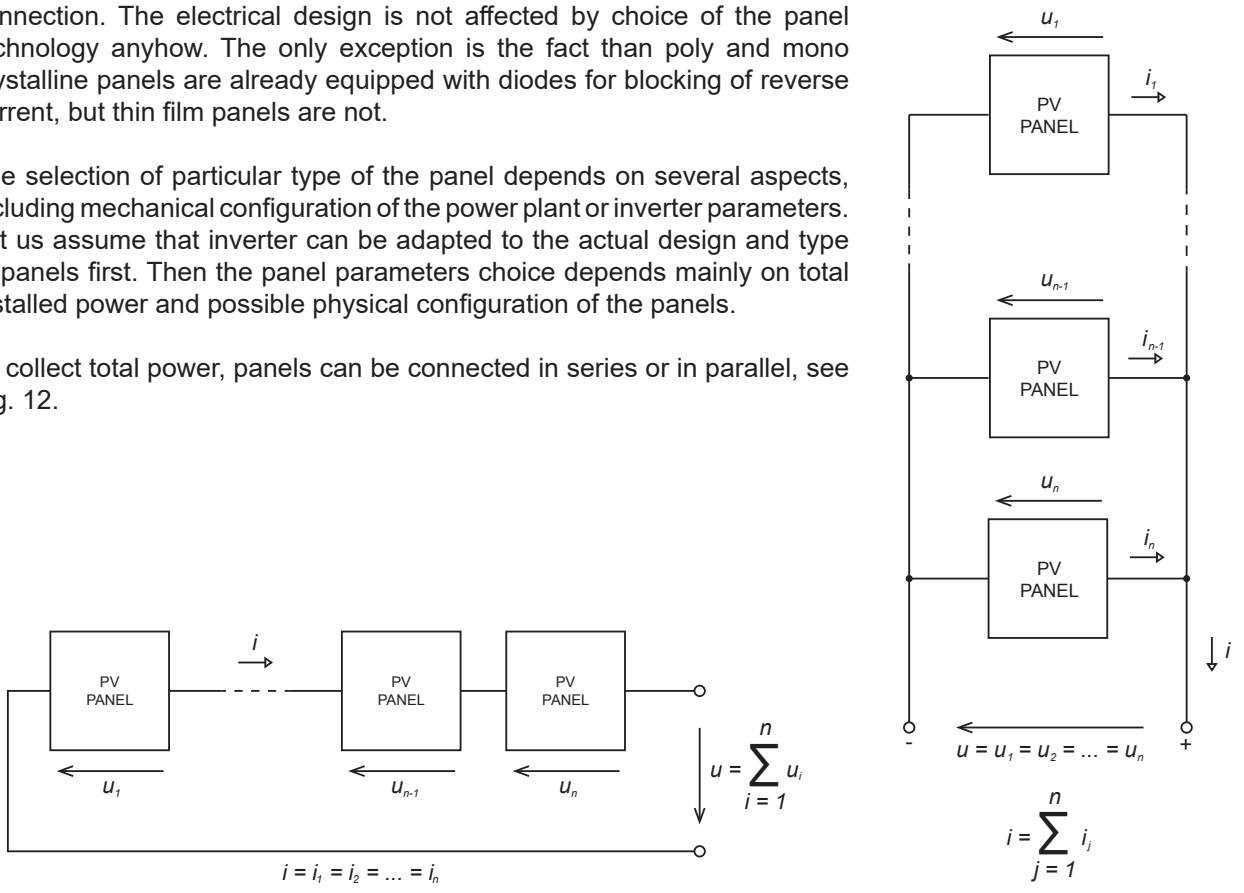

Fig. 12 Serial (left) and parallel (right) connection of panels. Schematic diagrams only.

Photovoltaic applications

Basic configuration is a serial connection of panels and creation of so called strings. For larger systems, particular strings can be connected in parallel – directly or via separate inputs of an inverter. The serial connection simplifies design of DC/AC inverter because it ensures DC Voltage value at level allowing direct conversion to AC only by means of switching without any circuit increasing the Voltage. An other reason for this type of connection is reduction of loss. Main part of the total loss at DC side of a PV system is directly linked to actual current – power loss at circuit breaker or fuse, cable losses etc. Limit of Voltage and thus number of panels in series is given by Maximum system Voltage. Its typical value is 1500 V DC. In real design, maximum voltage is limited by other aspects, mainly by parameters of chosen inverter. Because current through the whole string is the same, it is necessary to combine panels of the same type in order to maximize output DC power.

For larger systems more strings need to be operated. There are principally three ways of combination of output currents of parallel strings. The first one is direct combination of output currents at DC side. It is usually done in combiner boxes, or the connection can be also done inside of inverter by means of parallel input connectors. The way of connection significantly affects design of protection circuits. Important requirement for this design is the same Voltage of the connected strings.

The second way is a combination inside of a PV inverter, where there are several MPP trackers. This approach increases efficiency of the systems and allows operate particular strings at different conditions (voltage, current). It can bring significant increase of produced power e.g. in systems where particular string are not operating at the same intensity of sunshine (e.g. rooftop systems installed at rugged roofs).

The last way is to combine the produced energy at AC side. Each string or array of strings has separate inverter. Then the design of DC part is the same as for the first case.

Parallel connection of strings has its sense also for smaller systems where it would be possible to connect all panels into one string. Such situation example is shown in Fig. 13.

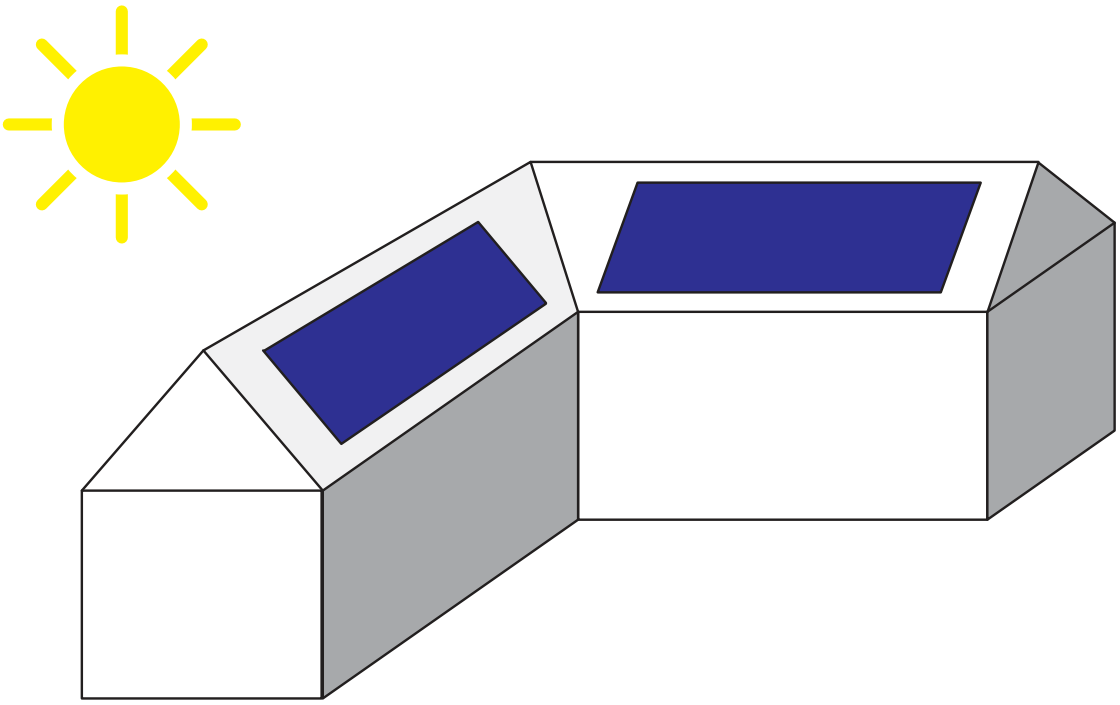

Fig. 13 A complex rooftop with different light intensity of particular parts of installation.

Photovoltaic applications

A string operates with the same current of all panels. The value of this current is given by minimum current among the particular panels. On the assumption that all installed panels are of the same type, their current is defined by intensity of light. Typically on rugged rooftops, intensity at their particular parts can be very different. The only way how to maximize total produced power is to split the system into several strings. If the strings contain the same number of panels, their outputs can be directly combined and there is no other investment into inverters. The parallel configuration of strings should be also considered in case that there is a smokestack on the roof or a tree close to the installation. The same issue is true also for a single panel. A single panel is nothing but serial combination of PV diodes or cells. Output current is defined by the minimum current of the diodes. A shadow on a part of the string has the same effect as if there is a shadow over the whole string, see Fig. 14.

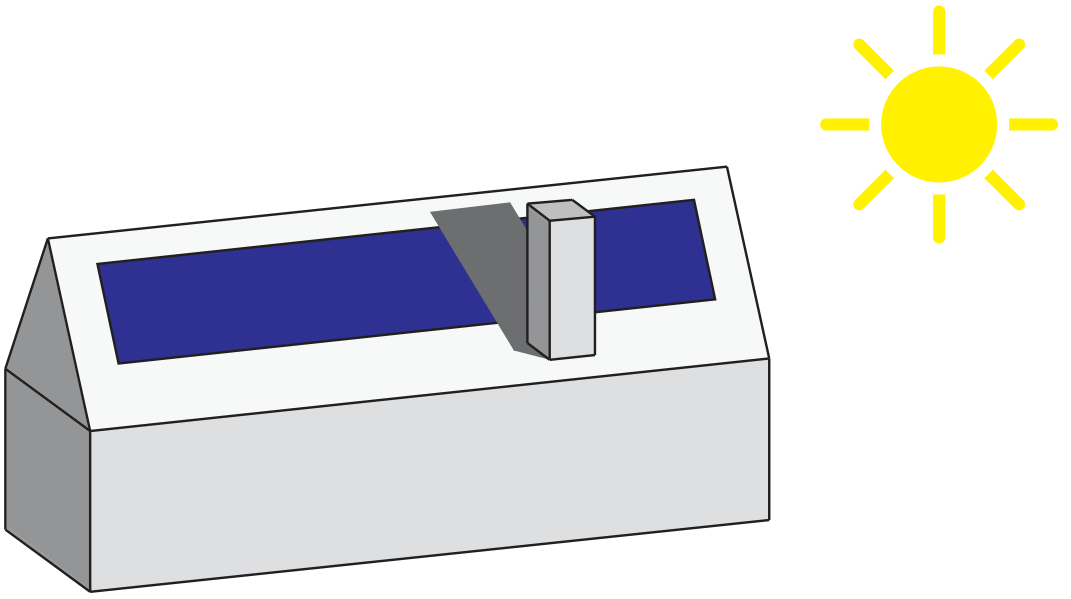

Fig. 14 A shadow on a part of a string reduces current of the whole string.

Photovoltaic applications

Design of DC protective and control circuits

Let us take protection of a single string into account at first. Based on requirements of IEC 62548-1, there should be installed a protective device for a panel or a string protection. In general, there are two possible devices to provide this functionality, miniature circuit breaker and fuse disconnector with a fuse link. Design of appropriate rated current for both devices is discussed above.

The most reliable protection of a string can be achieved with miniature circuit breaker. Due to polarity variation in different operational modes of the PV system, such DC circuit breaker has to be polarity independent (line Ex9BP, see Fig. 15).

Fig. 15 Photovoltaic DC circuit breaker Ex9BP up to 1000 V DC.

Standard DC MCBs with fixed polarity cannot provide sufficient protection and service reliability. Main advantages of MCB protection follow from three facts. In case of tripping, the circuit breaker can operate again, there are no additional costs like e.g. for a new fuse link. For applications where it is required to provide some additional remote functionality, an MCB is suitable candidate. There can be installed auxiliary contacts to see status of the device. For remote safety disconnection, undervoltage release can be used. The last issue is that MCB can be used also for disconnection function given by the standards and can be operated by unskilled persons. It is important mainly for residential rooftop applications.

Basic string protective device is cylindrical fuse disconnector with a fuse link (Ex9FP, see Fig. 16).

Fig. 16 Photovoltaic cylindrical fuse disconnector Ex9FP up to 1000 V DC

Photovoltaic applications

An advantage of the fuse solution is low initial investment. Another argument to use such device is small installation width. Such disconnectors can operate at 1000 V DC as a single module device. In applications where it is necessary to ensure both pole disconnection of string by this disconnector, two pole device of two module width must be used.

There are, however, a few application limits of fuse disconnector. The lower initial investment is compensated in case of trip of a fuse link, which needs to be replaced. Another issue is that it is not possible to operate such device remotely. But there are even more important differences coming from general design of such devices. The first of them is that DC operated cylindrical fuse disconnectors are not switch disconnectors, i.e. their utilization category is DC-20. In case that the same device should fulfill also the role of the disconnector defined in HD 60364-7-712, there is necessary an additional device which will interrupt current first. Other issue is that all cylindrical fuse disconnectors, including AC ones, are intended and can be operated by skilled personnel only. For this reason, they are not suitable for residential systems.

String boxes can consists also of a disconnector. In case that a circuit breaker is used for protection, the same device can provide also this functionality. Otherwise, special device must be used. DC disconnector must be also polarity independent. Its utilization category must be at least DC-21 to allow switching under load. Fig. 17 shows PV switch disconnector Ex9IP.

Fig. 17 Photovoltaic DC switch disconnector Ex9IP.

Photovoltaic applications

Special area of protection of PV system is installation of Surge Protective Devices (SPD). Because we are still in DC part of the PV plant, also the SPDs have to be designed for DC protection. Besides SPD class with respective parameters and its operating voltage, the main aspect for design is the fact if the system is grounded or ungrounded.

For effective protection, it is necessary to connect SPD system to the grounding. This fact brings the difference in design of protection for grounded and ungrounded systems. The situation is depicted in Fig. 18.

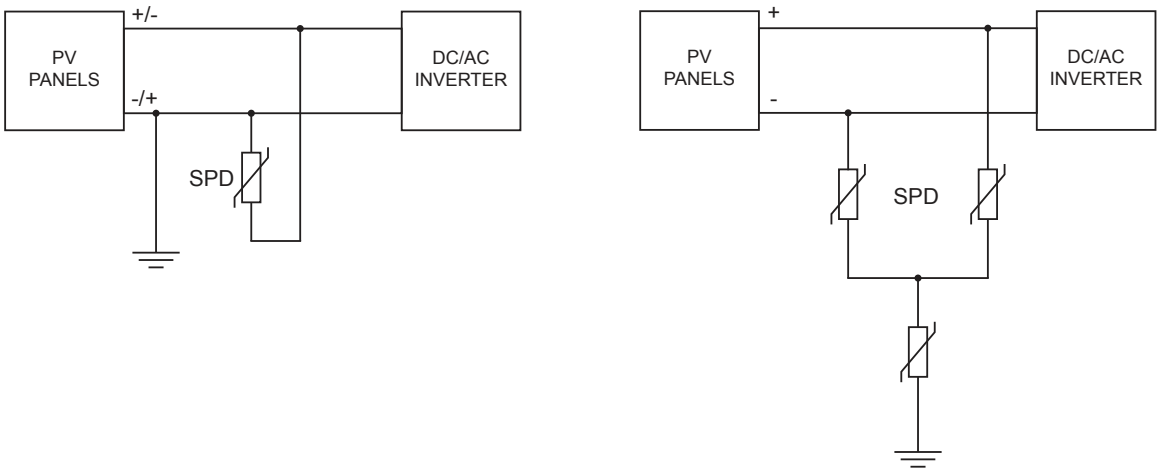

Fig. 18 Configuration of SPDs in grounded system (left) and ungrounded system (right).

To achieve better characteristics at higher DC voltages, there can be designed two MOV-based SPDs in series on a position of particular SPDs.

Some of available DC/AC inverters are declared as equipped with SPD protection. It is very important to pay attention on real SPD installed. In most of the cases, inverters contain SPD class T3 (III, D) only. It is just fine protection against residual transient overvoltage and it is not able to protect against higher energy surges.

Photovoltaic applications

For large PV systems consisting of several arrays connected in parallel, when every array consists of parallel strings, there is necessary to take into account a group protection of such system.

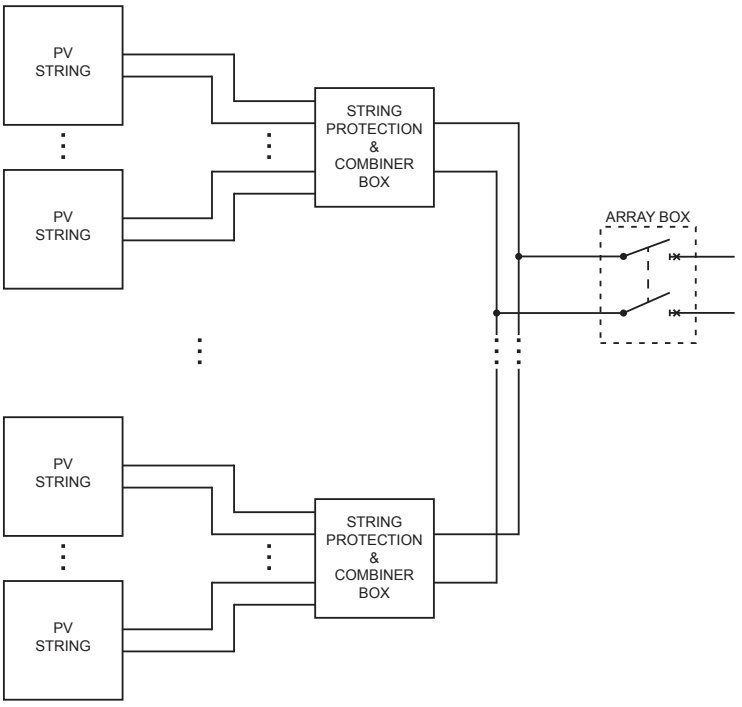

Fig. 19 Large PV system consisting of parallel arrays.

For devices used, the requirements are similar. Polarity independent ones are necessary in most of the cases. Circuit breakers and disconnectors are typical devices to be used. The intention of the circuit breakers is overload protection of the system and its wiring. When string protective devices are installed in the same box as the group (array) devices, only a disconnector can be used for this functionality. Its main role is the mandatory disconnection of PV panels from inverter.

Photovoltaic applications

Basic criteria for inverter selection

Inverter selection strongly depends on the size of the PV system under consideration. Besides obvious installed power, the size of the systems affects the inverter configuration at all.

One of the first inverter selection criterion is the fact if the system will be connected to a grid or not. It brings completely different solution. Off grid solution are mostly equipped also with energy storage systems (battery banks). The main difference is in the inverter technology, however. Inverters in grid connected systems are driven by the grid. Phase and frequency of produced electricity is synchronized with a grid voltage. Due to safety reasons, grid connected systems have to be equipped with automatic disconnector in case of drop of grid voltage. Such block is usually integrated directly into an inverter. Inverters designed for on grid operation thus cannot be used in off grid solution.

Very important part of any inverter is Maximum Power Point Tracker (MPPT). The key goal for any power plan is to maximize its efficiency and output power. PV panels consist of semiconductor diodes. In blocking polarization of diode voltage, a diode can produce electric current. Its value I_{el} depends directly on intensity of light I_L.

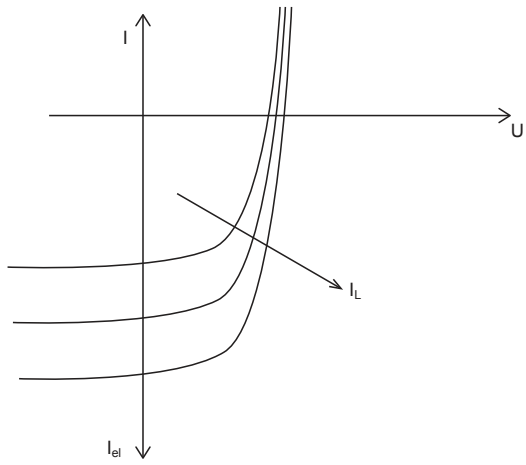

Fig. 20 Dependence of PV panel output current on intensity of light.

To reach maximum output power given as a multiple of voltage and current, it is important to find a point of the V-A characteristics with maximum value of U x I_{el}. Because this value depends also on other aspects like actual operating temperature, age of the panel etc., optimum value cannot be selected only based on supplied current. It is necessary to track the V-A characteristics during actual working conditions, see Fig. 21.

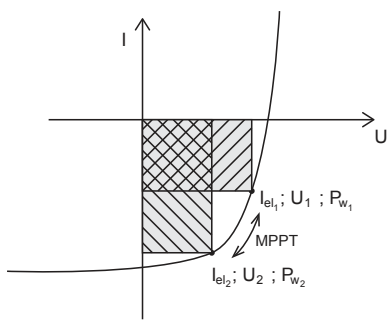

Fig. 21 Function of MPP Tracker on V-A characteristics of a PV panel.

Photovoltaic applications

This is achieved with Maximum Power Point Tracker MPPT. Its function partly affects also selection of string protective devices. Especially during MPPT starting, operating current close to I_{SC} can also be traced.

To one single MPP Tracker, several parallel strings up to maximum input current of the tracker can be connected. Such solution is suitable mainly for large PV systems where all the strings operate under same light conditions (green or brown field solutions, flat rooftop applications). Because MPP Tracker is the most expensive part of an inverter, such solution provides savings on investment, but does not affect power plant efficiency negatively.

Different situation is for system operating under non-uniform conditions, see e.g. situation in Fig. 13. Strings cannot be connected in parallel if they do not operate at the same voltage (i.e. there is different number of panels in particular strings). But also in situation if identical strings are designed, it can be advantageous to use separate MPP Trackers for particular ones. This is a typical situation for systems where strings operate under different light conditions (and thus with different output current). To reach maximum output power with different lighting of the strings, also different output voltages need to be traced. Light distribution over the panel installation affects optimum number of MPPT and thus also the selection of suitable inverter.

Efficiency of transmission of produced electricity is very important design parameter for large systems. Two different approaches can be used, see Fig. 22.

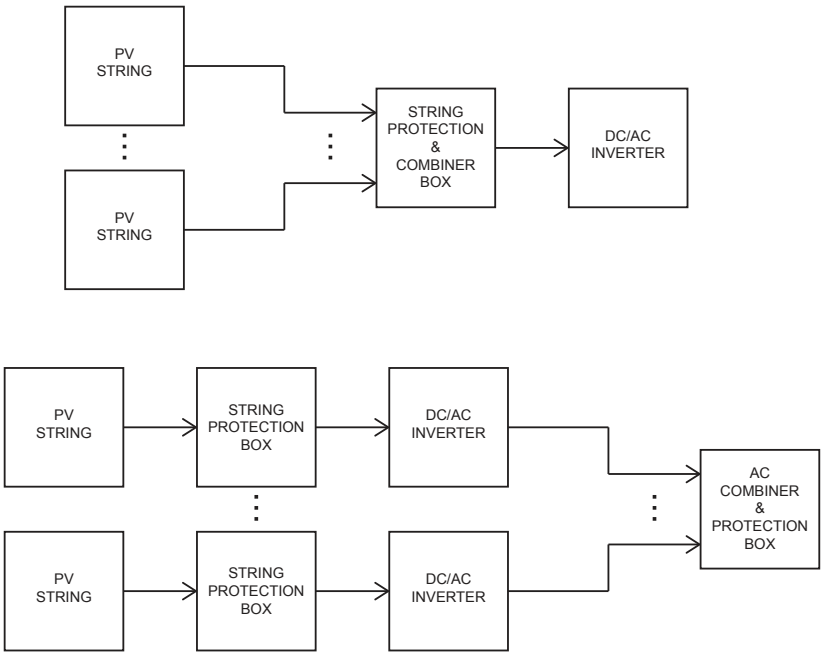

Fig. 22 Large PV system with a central inverter (above) and with distributed inverters (below).

Photovoltaic applications

The first style is to use a central inverter for whole power plant (or its section for very large systems). This design means to collect produced energy at DC side of the system. Such approach is advantageous for power stations localized in square or round areas, with uniform lighting of strings. This way higher efficiency of inverter and also lower investment to this part can be reached. Due to physical placement of the strings, also the overall length of higher cost DC cables is fully compensated with lower investment to the inverter.

The other approach is to use several lower power inverters for string or small arrays. This way is mostly used for systems installed in differently shaped areas, e.g. if the plant is built in a long and narrow field. Total produced electricity is combined at AC side. It brings lower investment to cables. Long DC cables in such cases could mean higher investment than higher costs per Wp for smaller inverters. Disadvantage of this decentralization lies in more difficulty service of such plant.

The biggest power plants with installed power from ca. 0.5 MWp usually use combination of both the approaches.

For small typically residential rooftop systems, one of the decisions is to choose either 1phase or 3phase inverter solution. Besides costs issues, the main argument for this decision is requirement of Utilities which grid the system will be connected to. In general, there is ca. 5 kW limit for non-three phase solutions (i.e. 1 and 2 phase ones). Utilities very often require 3phase solution even for lower installed power to ensure better balance of the grid.

Last important design point for inverter is grounding of the system. Based on HD 60364-7-712, a PV system can be grounded at its DC side only on condition that there is electric separation between its DC and AC part. One hand this is additional requirement causing some investment. On the other hand grounded system can be much better and more effectively protected e.g. against overvoltage. With inverters designed to be grounded it is necessary to take care which pole of the DC side is intended for that. Grounding of the other will not only mean malfunction of the inverter but the inverter can even be destroyed.

Connection of PV system to an AC grid

Connection to a grid must follow several regulations and criteria. There have to be followed requirements given by general law as well as specific rules of the particular utility company. At AC side, there must be ensured fulfilling of general safety requirements given e.g. in HD 60364. There are also common specific rules for PV, like grounding of the system, synchronization of the frequency, phase and voltage to the system, disconnection in case of grid voltage drop etc. Local utilities can have slightly different requirements on setting of protection systems (allowed differences in voltage, phase etc.). Special care must be taken for power balance among particular phases as well as power factor. An inherent part of grid connected PV system is energy measurement.

Notes

Photovoltaic components

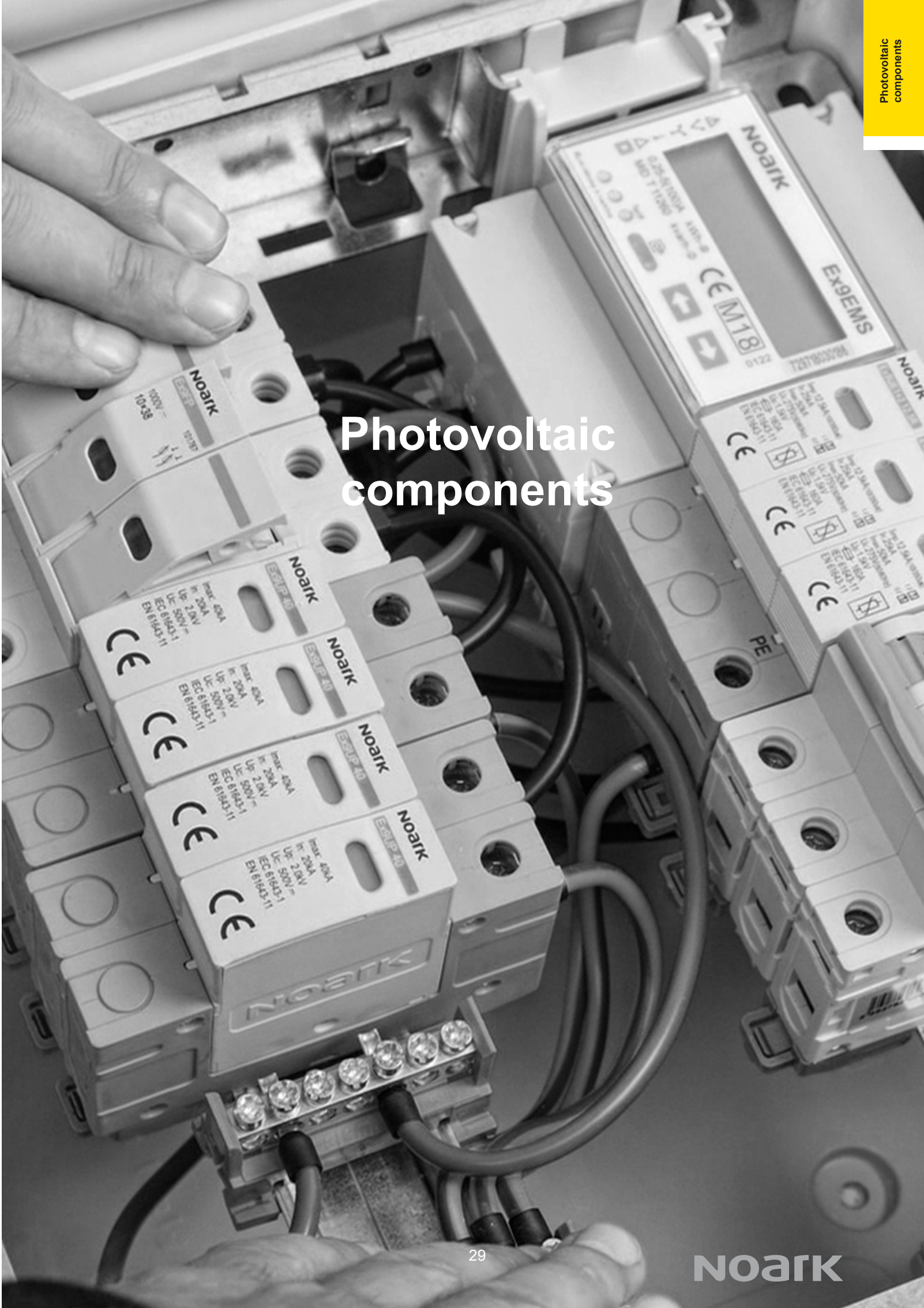

Content

Ordering information

DC MCBs Ex9BP up to 1000 V DC

- **DC Miniature Circuit Breakers**
- **Non-polarized, suitable for photovoltaic applications**
- **Tested according to IEC/EN 60947-2**
- **Rated short circuit breaking capacity I_{cu} 6 kA**
- **Rated operating voltage U_e of 250 V DC per pole**
- **Width 2 and 4 modules**
- **Tripping characteristics C, K**
- **Rated current up to 63A**
- **Wide range of accessories**

DC miniature circuit breakers Ex9BP are designed for direct current applications. Thanks to their polarity independency are suitable for photovoltaic aplications.

It can be combined with wide range of accessories including auxiliary and signal contacts, shunt trip release and undervoltage release. It is possible to create diversed combination of accessories. These combinations are only limited by total number, not by the type of accessories - all components fit together. It can be used up to three units of auxiliary or alarm contacts plus up to two units for release units.

Type Key

Ex9	BP	4P	DC1000V	C	32
Product family	Product	Poles	Rated voltage	Tripping curve	Rated current
Ex9	Non-polarized DC MCBs	2, 4	DC500V DC1000V	C, K	10 — 63 A

Certification marks

DC MCBs Ex9BP up to 1000 V DC

Accessories

Aux. or signal contacts **AX, AL, AXL** Up to 3 units	Voltage or trip releases **SHT, UVT** Up to 2 units	Miniature Circuit Breaker **Ex9BP** 2, 4-module width

Auxiliary contacts AX31	see installation devices catalogue
Alarm contact AL3	see installation devices catalogue
Auxiliary and alarm contact AXL31	see installation devices catalogue
Shunt trip releases SHT31	see installation devices catalogue
Undervoltage releases UVT31	see installation devices catalogue

All accessories are mounted to the MCBs Ex9BP from the left. The undervoltage release UVT in PV system is intended e.g. for safe remote disconnection of DC part from installation.

DC MCBs Ex9BP up to 1000 V DC

C-Characteristic, 2-module, 500 V DC

Rated current	Width	Char.	Article No.	Type	Packing
10A	2MU	C	111559	Ex9BP 2P DC500V C10	1/6/72
13A	2MU	C	111560	Ex9BP 2P DC500V C13	1/6/72
16A	2MU	C	111561	Ex9BP 2P DC500V C16	1/6/72
20A	2MU	C	111562	Ex9BP 2P DC500V C20	1/6/72
25A	2MU	C	111563	Ex9BP 2P DC500V C25	1/6/72
32A	2MU	C	111564	Ex9BP 2P DC500V C32	1/6/72
40A	2MU	C	111565	Ex9BP 2P DC500V C40	1/6/72
50A	2MU	C	111566	Ex9BP 2P DC500V C50	1/6/72
63A	2MU	C	111567	Ex9BP 2P DC500V C63	1/6/72

C-Characteristic, 4-module, 1000 V DC

Rated current	Width	Char.	Article No.	Type	Packing
10A	4MU	C	111568	Ex9BP 4P DC1000V C10	1/3/36
13A	4MU	C	111569	Ex9BP 4P DC1000V C13	1/3/36
16A	4MU	C	111570	Ex9BP 4P DC1000V C16	1/3/36
20A	4MU	C	111571	Ex9BP 4P DC1000V C20	1/3/36
25A	4MU	C	111572	Ex9BP 4P DC1000V C25	1/3/36
32A	4MU	C	111573	Ex9BP 4P DC1000V C32	1/3/36
40A	4MU	C	111574	Ex9BP 4P DC1000V C40	1/3/36
50A	4MU	C	111575	Ex9BP 4P DC1000V C50	1/3/36
63A	4MU	C	111576	Ex9BP 4P DC1000V C63	1/3/36

K-Characteristic, 2-module, 500 V DC

Rated current	Width	Char.	Article No.	Type	Packing
10A	2MU	K	111577	Ex9BP 2P DC500V K10	1/6/72
13A	2MU	K	111578	Ex9BP 2P DC500V K13	1/6/72
16A	2MU	K	111579	Ex9BP 2P DC500V K16	1/6/72
20A	2MU	K	111580	Ex9BP 2P DC500V K20	1/6/72
25A	2MU	K	111581	Ex9BP 2P DC500V K25	1/6/72
32A	2MU	K	111582	Ex9BP 2P DC500V K32	1/6/72
40A	2MU	K	111583	Ex9BP 2P DC500V K40	1/6/72
50A	2MU	K	111584	Ex9BP 2P DC500V K50	1/6/72
63A	2MU	K	111585	Ex9BP 2P DC500V K63	1/6/72

K-Characteristic, 4-module, 1000 V DC

Rated current	Width	Char.	Article No.	Type	Packing
10A	4MU	K	111586	Ex9BP 4P DC1000V K10	1/3/36
13A	4MU	K	111587	Ex9BP 4P DC1000V K13	1/3/36
16A	4MU	K	111588	Ex9BP 4P DC1000V K16	1/3/36
20A	4MU	K	111589	Ex9BP 4P DC1000V K20	1/3/36
25A	4MU	K	111590	Ex9BP 4P DC1000V K25	1/3/36
32A	4MU	K	111591	Ex9BP 4P DC1000V K32	1/3/36
40A	4MU	K	111592	Ex9BP 4P DC1000V K40	1/3/36
50A	4MU	K	111593	Ex9BP 4P DC1000V K50	1/3/36
63A	4MU	K	111594	Ex9BP 4P DC1000V K63	1/3/36

Technical data p. 97

Notes

DC MCCBs Ex9MV2S-PV

- **DC Moulded Case Circuit Breakers suitable for photovoltaic applications**
- **Frame size M2**
- **Rated current up to 250 A**
- **Rated ultimate short circuit breaking capacity I_{cu} = 15 kA, I_{cs} = 100 % I_{cu}**
- **Rated voltage 1500 V DC**
- **Thermomagnetic releases**
- **Fixed version**

DC Moulded Case Circuit Breakers Ex9MV2S-PV are intended mainly for photovoltaic applications. Testing according to IEC / EN 60947-2 standards ensures functions and reliability for wide variety of applications including isolation.

These breakers are offered with breaking capacity of 15 kA. Rated impulse withstand voltage U_{imp} 12 kV makes it possible to use them even in systems with occurences of transient overvoltage waves of high intensity.

Utilization category A.

Type Key

Ex9	MV	2	S	-PV	DC1500	125
Product family	Product	Frame size	Breaking capacity	Usage application	Rated voltage	Rated current
Ex9	MV: DC MCCB	2: up to 250 A	S: 15 kA	Photovoltaic dedicated MCCB	1500 V DC	125 A 160 A 200 A 225 A 250 A

Certification marks

CE

DC MCCBs Ex9MV2S-PV

Version Ex9MV2S-PV/DC1500, I_{cu} = 15 kA

- DC Moulded Case Circuit Breakers suitable for photovoltaic
- I_{cs} = I_{cu} = 15 kA at 1500 V DC
- Fixed version
- Instantaneous release I_i = I_n x10
- Mounting screws and phase barriers in the scope of delivery

Rated current I_n	Article No.	Type	Packing
125 A	110194	Ex9MV2S-PV/DC1500 125	1/8
160 A	110195	Ex9MV2S-PV/DC1500 160	1/8
200 A	110196	Ex9MV2S-PV/DC1500 200	1/8
225 A	110197	Ex9MV2S-PV/DC1500 225	1/8
250 A	110198	Ex9MV2S-PV/DC1500 250	1/8

Technical data p. 100

Accessories for MCCBs Ex9MV2S

- **Accessories for Ex9MV2S line devices**
- **Auxiliary contacts synchronous with main contacts**
- **Signal contacts active on electrical tripping of the circuit breaker (tripping signal contacts)**
- **Shunt trip releases**
- **Rotary handles**

Accessories suitable for PV Moulded Case Circuit Breakers Ex9MV2S. It is possible to supplement or modify functions of a basic circuit breaker by the installation of suitable accessories.

Circuit breakers can be equipped with auxiliary contacts AX22V (or 2AX22V) and one unit of signal contact AL22 or a combination of both AX+AL22V. Accessories are mounted into specific positions, for this reason parts mounted on the right side are named with a -R in the product name (2AX22VR). One unit of shunt trip relase SHT22VR can be installed in the breaker.

The circuit breakers can also be equipped with an extended rotatory handle for different operation of the toggle, e.g. for door coupling.

Mounting of the device onto plate can be done directly.

Accessories for MCCBs Ex9MV2S

Auxiliary and signal contact units

- Auxiliary contacts synchronous with main contacts of the circuit breaker
- Signal contacts active on electrical tripping of the circuit breaker (tripping signal contacts)

Function	Suitable MCCB	Contacts	Article No.	Type	Packing
Auxiliary	Ex9MV2S	1 CO	110199	AX22V	1/8
Auxiliary	Ex9MV2S	2 CO	110200	2AX22V	1/8
Signal	Ex9MV2S	1 CO	110201	AL22V	1/8
Auxiliary + Signal	Ex9MV2S	2 CO	110202	AX+AL22V	1/8
Auxiliary	Ex9MV2S	1 CO	110206	AX22VR	1/8
Auxiliary	Ex9MV2S	2 CO	110207	2AX22VR	1/8

Technical data p. 103

Shunt trip releases

- It is possible to use one unit of shunt trip release SHT22VR on the right side of the MCCB

Aux. cont.	Suitable MCCB	Operating Voltage	Article No.	Type	Packing
-	Ex9MV2S	24V DC	110208	SHT22VR DC24V	1/8
-	Ex9MV2S	230V AC	110209	SHT22VR AC230V	1/8
-	Ex9MV2S	400V AC	110210	SHT22VR AC400V	1/8

Technical data p. 104

Extended rotary handles

- Rotary handle with extension shaft (extension shaft can be shortened)
- Scope of delivery: mechanism block, extension shaft, rotary handle
- Indication of connected breaker status ON-OFF-TRIP
- Can be locked in ON and OFF position

Suitable MCCB	Length	Colour	Article No.	Type	Packing
Ex9MV2S	300 mm	Black	110211	ERH-1	1

Technical data p. 103

Moulded Case Circuit Breakers Ex9M DC TM

- **Thermo-magnetic tripping unit for power distribution**
- **Frame sizes M1-M5**
- **Rated operating current up to 800 A**
- **3 and 4-pole versions**
- **Rated ultimate short circuit breaking capacity I_{cu}=I_{cs} up to 100 kA**
- **Rated voltage 750 V DC (3-pole) and 1000 V DC (4-pole)**

DC Moulded Case Circuit Breakers Ex9MD Thermo-magnetic (TM) are intended mainly for photovoltaic applications. Testing according to IEC / EN 60947-2 standards ensures functionalities and reliability for wide variety of applications including isolation.

These breakers are offered with breaking capacities from 25 kA up to extreme 100 kA. High rated impulse withstand voltage makes it possible to use them even in system with occurences of transient overvoltage waves of high intensity, e.g. in heavy industry.

Utilization category A circuit breakers.

Type Key

Ex9	MD	3	S	TM	250	4P
Product family	Product series	Frame size	Breaking capacity	Release technology	Rated current	Poles
Ex9	MD: DC MCCB	1: to 160 A 2: to 250 A 3: to 500 A 4: to 630 A 5: to 800 A	B: 25 kA S: 36 kA N: 50 kA Q: 70 kA H: 100 kA	TM: Thermo Magnetic type for power distribution	M1: 16—160 A M2: 125—250 A M3: 250—400 A M4: 400—630 A M5: 630—800 A	3P: 3-pole 4P4T: 4-pole with protected N-pole

Certification marks

CE

Moulded Case Circuit Breakers Ex9M DC TM

Internal accessories

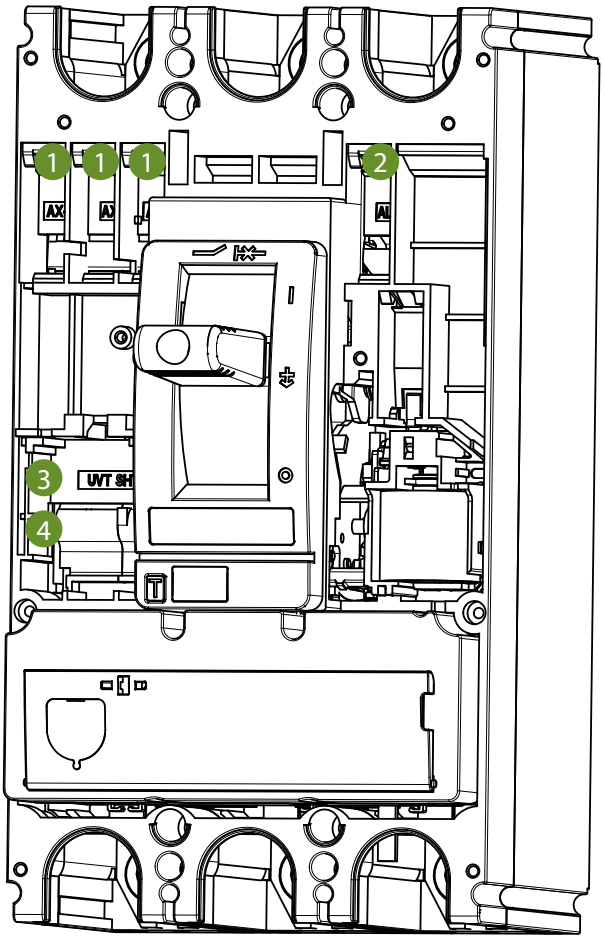

1	2	3	4
Auxiliary contact **AX21M**	Signal contact **AL21M**	Shunt trip release **SHT2*i*** 1 unit or UVT2*i*	Undervoltage release **UVT2*i*** 1 unit or SHT2*i*

Auxiliary contact AX21M	see Moulded Case Circuit Breakers catalogue
Signal contact AL21M	see Moulded Case Circuit Breakers catalogue
Shunt trip releases SHT2*i*	see Moulded Case Circuit Breakers catalogue
Undervoltage releases UVT2*i*	see Moulded Case Circuit Breakers catalogue

All internal accessories for the frame sizes M2+M3 and M4+M5 are identical.

Moulded Case Circuit Breakers Ex9M DC TM

External accessories Ex9M1-M5 DC TM

Phase barriers
PHS2*i*

Terminal cover, short
TCV2*i*

Terminal cover, long
TCE2*i*

Remote operator
MOD2*i*

Direct rotary handle
RHD2*i*

Extended rotary handle
ERH2*i*

Phase barriers PHS2*i*	see Moulded Case Circuit Breakers catalogue
Terminal cover, short TCV2*i*	see Moulded Case Circuit Breakers catalogue
Terminal cover, long TCE2*i*	see Moulded Case Circuit Breakers catalogue
Remote operators MOD2*i*	see Moulded Case Circuit Breakers catalogue
Direct rotary handles RHD2*i*	see Moulded Case Circuit Breakers catalogue
Extended rotary handles ERH2*i*	see Moulded Case Circuit Breakers catalogue

Moulded Case Circuit Breakers Ex9M DC TM

External accessories Ex9M1-M5 DC TM

Tunnel terminals
MC2*i* W

Mounting depth spacers
WG *i*

Screw type terminals
MC2*i*

Screw terminals
MCS2*i*

Din rail adapter
DRA2*i*

Tunnel terminals MC2*i* W	see Installation devices catalogue
Mounting depth spacers WG *i*	see Installation devices catalogue
Screw type terminals MC2*i*	see Installation devices catalogue
Screw terminals MCS2*i*	see Installation devices catalogue
Din rail DRA2*i*	see Installation devices catalogue

Moulded Case Circuit Breakers Ex9M DC TM

Version Ex9MD1B up to 160 A, I_{cu} = 25 kA

- 3 (up to 750 V DC) and 4-pole (up to 1 000 V DC) Moulded Case Circuit Breakers
- $I_{cs} = I_{cu}$ = 25 kA at 1000 V DC
- I_r can be set in range (0.7 — 1.0) × I_n
- I_i can be set in range (5 — 10) × I_n for 125 A and 160 A types, otherwise is fixed at 10 × I_n
- Mounting screws, screw type terminals as well as phase barriers in the scope of delivery

Poles	Rated current i_n	Overcurrent release I_r	instant. release I_i	Article No.	Type	Packing
3	16A	11-16 A	160 A	112511	Ex9MD1B TM 16 3P	1/12
3	20A	14-20 A	200 A	112512	Ex9MD1B TM 20 3P	1/12
3	25A	17-25 A	250 A	112513	Ex9MD1B TM 25 3P	1/12
3	32A	22-32 A	320 A	112514	Ex9MD1B TM 32 3P	1/12
3	40A	28-40 A	400 A	112515	Ex9MD1B TM 40 3P	1/12
3	50A	35-50 A	500 A	112516	Ex9MD1B TM 50 3P	1/12
3	63A	44-63 A	630 A	112517	Ex9MD1B TM 63 3P	1/12
3	80A	56-80 A	800 A	112518	Ex9MD1B TM 80 3P	1/12
3	100A	70-100 A	1000 A	112519	Ex9MD1B TM 100 3P	1/12
3	125A	87-125 A	625-1250 A	112520	Ex9MD1B TM 125 3P	1/12
3	160A	112-160 A	800-1600 A	112521	Ex9MD1B TM 160 3P	1/12
4	16A	11-16 A	160 A	112522	Ex9MD1B TM 16 4P4T	1/12
4	20A	14-20 A	200 A	112523	Ex9MD1B TM 20 4P4T	1/12
4	25A	17-25 A	250 A	112524	Ex9MD1B TM 25 4P4T	1/12
4	32A	22-32 A	320 A	112525	Ex9MD1B TM 32 4P4T	1/12
4	40A	28-40 A	400 A	112526	Ex9MD1B TM 40 4P4T	1/12
4	50A	35-50 A	500 A	112527	Ex9MD1B TM 50 4P4T	1/12
4	63A	44-63 A	630 A	112528	Ex9MD1B TM 63 4P4T	1/12
4	80A	56-80 A	800 A	112529	Ex9MD1B TM 80 4P4T	1/12
4	100A	70-100 A	1000 A	112530	Ex9MD1B TM 100 4P4T	1/12
4	125A	87-125 A	625-1250 A	112531	Ex9MD1B TM 125 4P4T	1/12
4	160A	112-160 A	800-1600 A	112532	Ex9MD1B TM 160 4P4T	1/12

Version Ex9MD1S up to 160 A, I_{cu} = 36 kA

- 3 (up to 750 V DC) and 4-pole (up to 1 000 V DC) Moulded Case Circuit Breakers
- $I_{cs} = I_{cu}$ = 36 kA at 1000 V DC
- I_r can be set in range (0.7 — 1.0) × I_n
- I_i can be set in range (5 — 10) × I_n for 125 A and 160 A types, otherwise is fixed at 10 × I_n
- Mounting screws, screw type terminals as well as phase barriers in the scope of delivery

Poles	Rated current i_n	Overcurrent release I_r	instant. release I_i	Article No.	Type	Packing
3	16A	11-16 A	160 A	112533	Ex9MD1S TM 16 3P	1/12
3	20A	14-20 A	200 A	112534	Ex9MD1S TM 20 3P	1/12
3	25A	17-25 A	250 A	112535	Ex9MD1S TM 25 3P	1/12
3	32A	22-32 A	320 A	112536	Ex9MD1S TM 32 3P	1/12
3	40A	28-40 A	400 A	112537	Ex9MD1S TM 40 3P	1/12
3	50A	35-50 A	500 A	112538	Ex9MD1S TM 50 3P	1/12
3	63A	44-63 A	630 A	112539	Ex9MD1S TM 63 3P	1/12
3	80A	56-80 A	800 A	112540	Ex9MD1S TM 80 3P	1/12
3	100A	70-100 A	1000 A	112541	Ex9MD1S TM 100 3P	1/12
3	125A	87-125 A	625-1250 A	112542	Ex9MD1S TM 125 3P	1/12
3	160A	112-160 A	800-1600 A	112543	Ex9MD1S TM 160 3P	1/12
4	16A	11-16 A	160 A	112544	Ex9MD1S TM 16 4P4T	1/12
4	20A	14-20 A	200 A	112545	Ex9MD1S TM 20 4P4T	1/12
4	25A	17-25 A	250 A	112546	Ex9MD1S TM 25 4P4T	1/12
4	32A	22-32 A	320 A	112547	Ex9MD1S TM 32 4P4T	1/12
4	40A	28-40 A	400 A	112548	Ex9MD1S TM 40 4P4T	1/12
4	50A	35-50 A	500 A	112549	Ex9MD1S TM 50 4P4T	1/12
4	63A	44-63 A	630 A	112550	Ex9MD1S TM 63 4P4T	1/12
4	80A	56-80 A	800 A	112551	Ex9MD1S TM 80 4P4T	1/12
4	100A	70-100 A	1000 A	112552	Ex9MD1S TM 100 4P4T	1/12
4	125A	87-125 A	625-1250 A	112553	Ex9MD1S TM 125 4P4T	1/12
4	160A	112-160 A	800-1600 A	112554	Ex9MD1S TM 160 4P4T	1/12

Technical data p. 106

Moulded Case Circuit Breakers Ex9M DC TM

Version Ex9MD1N up to 160 A, I_{cu} = 50 kA

- 3 (up to 750 V DC) and 4-pole (up to 1 000 V DC) Moulded Case Circuit Breakers
- $I_{cs} = I_{cu}$ = 50 kA at 1000 V DC
- I_r can be set in range (0.7 — 1.0) × I_n
- I_i can be set in range (5 — 10) × I_n for 125 A and 160 A types, otherwise is fixed at 10 × I_n
- Mounting screws, screw type terminals as well as phase barriers in the scope of delivery

Poles	Rated current i_n	Overcurrent release I_r	instant. release I_i	Article No.	Type	Packing
3	16A	11-16 A	160 A	112555	Ex9MD1N TM 16 3P	1/12
3	20A	14-20 A	200 A	112556	Ex9MD1N TM 20 3P	1/12
3	25A	17-25 A	250 A	112557	Ex9MD1N TM 25 3P	1/12
3	32A	22-32 A	320 A	112558	Ex9MD1N TM 32 3P	1/12
3	40A	28-40 A	400 A	112559	Ex9MD1N TM 40 3P	1/12
3	50A	35-50 A	500 A	112560	Ex9MD1N TM 50 3P	1/12
3	63A	44-63 A	630 A	112561	Ex9MD1N TM 63 3P	1/12
3	80A	56-80 A	800 A	112562	Ex9MD1N TM 80 3P	1/12
3	100A	70-100 A	1000 A	112563	Ex9MD1N TM 100 3P	1/12
3	125A	87-125 A	625-1250 A	112564	Ex9MD1N TM 125 3P	1/12
3	160A	112-160 A	800-1600 A	112565	Ex9MD1N TM 160 3P	1/12
4	16A	11-16 A	160 A	112566	Ex9MD1N TM 16 4P4T	1/12
4	20A	14-20 A	200 A	112567	Ex9MD1N TM 20 4P4T	1/12
4	25A	17-25 A	250 A	112568	Ex9MD1N TM 25 4P4T	1/12
4	32A	22-32 A	320 A	112569	Ex9MD1N TM 32 4P4T	1/12
4	40A	28-40 A	400 A	112570	Ex9MD1N TM 40 4P4T	1/12
4	50A	35-50 A	500 A	112571	Ex9MD1N TM 50 4P4T	1/12
4	63A	44-63 A	630 A	112572	Ex9MD1N TM 63 4P4T	1/12
4	80A	56-80 A	800 A	112573	Ex9MD1N TM 80 4P4T	1/12
4	100A	70-100 A	1000 A	112574	Ex9MD1N TM 100 4P4T	1/12
4	125A	87-125 A	625-1250 A	112575	Ex9MD1N TM 125 4P4T	1/12
4	160A	112-160 A	800-1600 A	112576	Ex9MD1N TM 160 4P4T	1/12

Version Ex9MD1Q up to 160 A, I_{cu} = 70 kA

- 3 (up to 750 V DC) and 4-pole (up to 1 000 V DC) Moulded Case Circuit Breakers
- $I_{cs} = I_{cu}$ = 70 kA at 1000 V DC
- I_r can be set in range (0.7 — 1.0) × I_n
- I_i can be set in range (5 — 10) × I_n for 125 A and 160 A types, otherwise is fixed at 10 × I_n
- Mounting screws, screw type terminals as well as phase barriers in the scope of delivery

Poles	Rated current i_n	Overcurrent release I_r	instant. release I_i	Article No.	Type	Packing
3	16A	11-16 A	160 A	112577	Ex9MD1Q TM 16 3P	1/12
3	20A	14-20 A	200 A	112578	Ex9MD1Q TM 20 3P	1/12
3	25A	17-25 A	250 A	112579	Ex9MD1Q TM 25 3P	1/12
3	32A	22-32 A	320 A	112580	Ex9MD1Q TM 32 3P	1/12
3	40A	28-40 A	400 A	112581	Ex9MD1Q TM 40 3P	1/12
3	50A	35-50 A	500 A	112582	Ex9MD1Q TM 50 3P	1/12
3	63A	44-63 A	630 A	112583	Ex9MD1Q TM 63 3P	1/12
3	80A	56-80 A	800 A	112584	Ex9MD1Q TM 80 3P	1/12
3	100A	70-100 A	1000 A	112585	Ex9MD1Q TM 100 3P	1/12
3	125A	87-125 A	625-1250 A	112586	Ex9MD1Q TM 125 3P	1/12
3	160A	112-160 A	800-1600 A	112587	Ex9MD1Q TM 160 3P	1/12
4	16A	11-16 A	160 A	112588	Ex9MD1Q TM 16 4P4T	1/12
4	20A	14-20 A	200 A	112589	Ex9MD1Q TM 20 4P4T	1/12
4	25A	17-25 A	250 A	112590	Ex9MD1Q TM 25 4P4T	1/12
4	32A	22-32 A	320 A	112591	Ex9MD1Q TM 32 4P4T	1/12
4	40A	28-40 A	400 A	112592	Ex9MD1Q TM 40 4P4T	1/12
4	50A	35-50 A	500 A	112593	Ex9MD1Q TM 50 4P4T	1/12
4	63A	44-63 A	630 A	112594	Ex9MD1Q TM 63 4P4T	1/12
4	80A	56-80 A	800 A	112595	Ex9MD1Q TM 80 4P4T	1/12
4	100A	70-100 A	1000 A	112596	Ex9MD1Q TM 100 4P4T	1/12
4	125A	87-125 A	625-1250 A	112597	Ex9MD1Q TM 125 4P4T	1/12
4	160A	112-160 A	800-1600 A	112598	Ex9MD1Q TM 160 4P4T	1/12

Technical data p. 106

Moulded Case Circuit Breakers Ex9M DC TM

Version Ex9MD1H up to 160 A, I_{cu} = 100 kA

- 3 (up to 750 V DC) and 4-pole (up to 1 000 V DC) Moulded Case Circuit Breakers
- $I_{cs} = I_{cu}$ = 100 kA at 1000 V DC
- I_r can be set in range (0.7 — 1.0) × I_n
- I_i can be set in range (5 — 10) × I_n for 125 A and 160 A types, otherwise is fixed at 10 × I_n
- Mounting screws, screw type terminals as well as phase barriers in the scope of delivery

Poles	Rated current i_n	Overcurrent release I_r	instant. release I_i	Article No.	Type	Packing
3	16A	11-16 A	160 A	112599	Ex9MD1H TM 16 3P	1/12
3	20A	14-20 A	200 A	112600	Ex9MD1H TM 20 3P	1/12
3	25A	17-25 A	250 A	112601	Ex9MD1H TM 25 3P	1/12
3	32A	22-32 A	320 A	112602	Ex9MD1H TM 32 3P	1/12
3	40A	28-40 A	400 A	112603	Ex9MD1H TM 40 3P	1/12
3	50A	35-50 A	500 A	112604	Ex9MD1H TM 50 3P	1/12
3	63A	44-63 A	630 A	112605	Ex9MD1H TM 63 3P	1/12
3	80A	56-80 A	800 A	112606	Ex9MD1H TM 80 3P	1/12
3	100A	70-100 A	1000 A	112607	Ex9MD1H TM 100 3P	1/12
3	125A	87-125 A	625-1250 A	112608	Ex9MD1H TM 125 3P	1/12
3	160A	112-160 A	800-1600 A	112609	Ex9MD1H TM 160 3P	1/12
4	16A	11-16 A	160 A	112610	Ex9MD1H TM 16 4P4T	1/12
4	20A	14-20 A	200 A	112611	Ex9MD1H TM 20 4P4T	1/12
4	25A	17-25 A	250 A	112612	Ex9MD1H TM 25 4P4T	1/12
4	32A	22-32 A	320 A	112613	Ex9MD1H TM 32 4P4T	1/12
4	40A	28-40 A	400 A	112614	Ex9MD1H TM 40 4P4T	1/12
4	50A	35-50 A	500 A	112615	Ex9MD1H TM 50 4P4T	1/12
4	63A	44-63 A	630 A	112616	Ex9MD1H TM 63 4P4T	1/12
4	80A	56-80 A	800 A	112617	Ex9MD1H TM 80 4P4T	1/12
4	100A	70-100 A	1000 A	112618	Ex9MD1H TM 100 4P4T	1/12
4	125A	87-125 A	625-1250 A	112619	Ex9MD1H TM 125 4P4T	1/12
4	160A	112-160 A	800-1600 A	112620	Ex9MD1H TM 160 4P4T	1/12

Technical data p. 106

Moulded Case Circuit Breakers Ex9M DC TM

Version Ex9MD2B up to 250 A, I_{cu} = 25 kA

- 3 (up to 750 V DC) and 4-pole (up to 1 000 V DC) Moulded Case Circuit Breakers
- $I_{cs} = I_{cu}$ = 25 kA at 1000 V DC
- I_r can be set in range (0.7 — 1.0) × I_n
- I_i can be set in range (7 — 12) × I_n for 125 A and (5 — 10) × I_n for other devices up to 250 A
- Mounting screws, screw type terminals as well as phase barriers in the scope of delivery

Poles	Rated current i_n	Overcurrent release I_r	instant. release I_i	Article No.	Type	Packing
3	125 A	87-125 A	875-1500 A	112621	Ex9MD2B TM 125 3P	1/8
3	160 A	112-160 A	800-1600 A	112622	Ex9MD2B TM 160 3P	1/8
3	180 A	126-180 A	900-1800 A	112623	Ex9MD2B TM 180 3P	1/8
3	200 A	140-200 A	1000-2000 A	112624	Ex9MD2B TM 200 3P	1/8
3	225 A	158-225 A	1125-2250 A	112625	Ex9MD2B TM 225 3P	1/8
3	250 A	175-250 A	1250-2500 A	112626	Ex9MD2B TM 250 3P	1/8
4	125 A	87-125 A	875-1500 A	112627	Ex9MD2B TM 125 4P4T	1/8
4	160 A	112-160 A	800-1600 A	112628	Ex9MD2B TM 160 4P4T	1/8
4	180 A	126-180 A	900-1800 A	112629	Ex9MD2B TM 180 4P4T	1/8
4	200 A	140-200 A	1000-2000 A	112630	Ex9MD2B TM 200 4P4T	1/8
4	225 A	158-225 A	1125-2250 A	112631	Ex9MD2B TM 225 4P4T	1/8
4	250 A	175-250 A	1250-2500 A	112632	Ex9MD2B TM 250 4P4T	1/8

Version Ex9MD2S up to 250 A, I_{cu} = 36 kA

- 3 (up to 750 V DC) and 4-pole (up to 1 000 V DC) Moulded Case Circuit Breakers
- $I_{cs} = I_{cu}$ = 36 kA at 1000 V DC
- I_r can be set in range (0.7 — 1.0) × I_n
- I_i can be set in range (7 — 12) × I_n for 125 A and (5 — 10) × I_n for other devices up to 250 A
- Mounting screws, screw type terminals as well as phase barriers in the scope of delivery

Poles	Rated current i_n	Overcurrent release I_r	instant. release I_i	Article No.	Type	Packing
3	125 A	87-125 A	875-1500 A	112633	Ex9MD2S TM 125 3P	1/8
3	160 A	112-160 A	800-1600 A	112634	Ex9MD2S TM 160 3P	1/8
3	180 A	126-180 A	900-1800 A	112635	Ex9MD2S TM 180 3P	1/8
3	200 A	140-200 A	1000-2000 A	112636	Ex9MD2S TM 200 3P	1/8
3	225 A	158-225 A	1125-2250 A	112637	Ex9MD2S TM 225 3P	1/8
3	250 A	175-250 A	1250-2500 A	112638	Ex9MD2S TM 250 3P	1/8
4	125 A	87-125 A	875-1500 A	112639	Ex9MD2S TM 125 4P4T	1/8
4	160 A	112-160 A	800-1600 A	112640	Ex9MD2S TM 160 4P4T	1/8
4	180 A	126-180 A	900-1800 A	112641	Ex9MD2S TM 180 4P4T	1/8
4	200 A	140-200 A	1000-2000 A	112642	Ex9MD2S TM 200 4P4T	1/8
4	225 A	158-225 A	1125-2250 A	112643	Ex9MD2S TM 225 4P4T	1/8
4	250 A	175-250 A	1250-2500 A	112644	Ex9MD2S TM 250 4P4T	1/8

Technical data p. 110

Moulded Case Circuit Breakers Ex9M DC TM

Version Ex9MD2N up to 250 A, I_{cu} = 50 kA

- 3 (up to 750 V DC) and 4-pole (up to 1 000 V DC) Moulded Case Circuit Breakers
- $I_{cs} = I_{cu}$ = 50 kA at 1000 V DC
- I_r can be set in range (0.7 — 1.0) × I_n
- I_i can be set in range (7 — 12) × I_n for 125 A and (5 — 10) × I_n for other devices up to 250 A
- Mounting screws, screw type terminals as well as phase barriers in the scope of delivery

Poles	Rated current i_n	Overcurrent release I_r	instant. release I_i	Article No.	Type	Packing
3	125 A	87-125 A	875-1500 A	112645	Ex9MD2N TM 125 3P	1/8
3	160 A	112-160 A	800-1600 A	112646	Ex9MD2N TM 160 3P	1/8
3	180 A	126-180 A	900-1800 A	112647	Ex9MD2N TM 180 3P	1/8
3	200 A	140-200 A	1000-2000 A	112648	Ex9MD2N TM 200 3P	1/8
3	225 A	158-225 A	1125-2250 A	112649	Ex9MD2N TM 225 3P	1/8
3	250 A	175-250 A	1250-2500 A	112650	Ex9MD2N TM 250 3P	1/8
4	125 A	87-125 A	875-1500 A	112651	Ex9MD2N TM 125 4P4T	1/8
4	160 A	112-160 A	800-1600 A	112652	Ex9MD2N TM 160 4P4T	1/8
4	180 A	126-180 A	900-1800 A	112653	Ex9MD2N TM 180 4P4T	1/8
4	200 A	140-200 A	1000-2000 A	112654	Ex9MD2N TM 200 4P4T	1/8
4	225 A	158-225 A	1125-2250 A	112655	Ex9MD2N TM 225 4P4T	1/8
4	250 A	175-250 A	1250-2500 A	112656	Ex9MD2N TM 250 4P4T	1/8

Version Ex9MD2Q up to 250 A, I_{cu} = 70 kA

- 3 (up to 750 V DC) and 4-pole (up to 1 000 V DC) Moulded Case Circuit Breakers
- $I_{cs} = I_{cu}$ = 70 kA at 1000 V DC
- I_r can be set in range (0.7 — 1.0) × I_n
- I_i can be set in range (7 — 12) × I_n for 125 A and (5 — 10) × I_n for other devices up to 250 A
- Mounting screws, screw type terminals as well as phase barriers in the scope of delivery

Poles	Rated current i_n	Overcurrent release I_r	instant. release I_i	Article No.	Type	Packing
3	125 A	87-125 A	875-1500 A	112657	Ex9MD2Q TM 125 3P	1/8
3	160 A	112-160 A	800-1600 A	112658	Ex9MD2Q TM 160 3P	1/8
3	180 A	126-180 A	900-1800 A	112659	Ex9MD2Q TM 180 3P	1/8
3	200 A	140-200 A	1000-2000 A	112660	Ex9MD2Q TM 200 3P	1/8
3	225 A	158-225 A	1125-2250 A	112661	Ex9MD2Q TM 225 3P	1/8
3	250 A	175-250 A	1250-2500 A	112662	Ex9MD2Q TM 250 3P	1/8
4	125 A	87-125 A	875-1500 A	112663	Ex9MD2Q TM 125 4P4T	1/8
4	160 A	112-160 A	800-1600 A	112664	Ex9MD2Q TM 160 4P4T	1/8
4	180 A	126-180 A	900-1800 A	112665	Ex9MD2Q TM 180 4P4T	1/8
4	200 A	140-200 A	1000-2000 A	112666	Ex9MD2Q TM 200 4P4T	1/8
4	225 A	158-225 A	1125-2250 A	112667	Ex9MD2Q TM 225 4P4T	1/8
4	250 A	175-250 A	1250-2500 A	112668	Ex9MD2Q TM 250 4P4T	1/8

Technical data p. 110

Moulded Case Circuit Breakers Ex9M DC TM

Version Ex9MD2H up to 250 A, I_{cu} = 100 kA

- 3 (up to 750 V DC) and 4-pole (up to 1 000 V DC) Moulded Case Circuit Breakers
- $I_{cs} = I_{cu}$ = 100 kA at 1000 V DC
- I_r can be set in range (0.7 — 1.0) × I_n
- I_i can be set in range (7 — 12) × I_n for 125 A and (5 — 10) × I_n for other devices up to 250 A
- Mounting screws, screw type terminals as well as phase barriers in the scope of delivery

Poles	Rated current i_n	Overcurrent release I_r	instant. release I_i	Article No.	Type	Packing
3	125 A	87-125 A	875-1500 A	112669	Ex9MD2H TM 125 3P	1/8
3	160 A	112-160 A	800-1600 A	112670	Ex9MD2H TM 160 3P	1/8
3	180 A	126-180 A	900-1800 A	112671	Ex9MD2H TM 180 3P	1/8
3	200 A	140-200 A	1000-2000 A	112672	Ex9MD2H TM 200 3P	1/8
3	225 A	158-225 A	1125-2250 A	112673	Ex9MD2H TM 225 3P	1/8
3	250 A	175-250 A	1250-2500 A	112674	Ex9MD2H TM 250 3P	1/8
4	125 A	87-125 A	875-1500 A	112675	Ex9MD2H TM 125 4P4T	1/8
4	160 A	112-160 A	800-1600 A	112676	Ex9MD2H TM 160 4P4T	1/8
4	180 A	126-180 A	900-1800 A	112677	Ex9MD2H TM 180 4P4T	1/8
4	200 A	140-200 A	1000-2000 A	112678	Ex9MD2H TM 200 4P4T	1/8
4	225 A	158-225 A	1125-2250 A	112679	Ex9MD2H TM 225 4P4T	1/8
4	250 A	175-250 A	1250-2500 A	112680	Ex9MD2H TM 250 4P4T	1/8

Technical data p. 110

Moulded Case Circuit Breakers Ex9M DC TM

Version Ex9MD3B up to 400 A, I_{cu} = 25 kA

- 3 (up to 750 V DC) and 4-pole (up to 1 000 V DC) Moulded Case Circuit Breakers
- $I_{cs} = I_{cu}$ = 25 kA at 1000 V DC
- I_r can be set in range (0.7 — 1.0) × I_n
- I_i can be set in range (5 — 10) × I_n
- Mounting screws, screw type terminals as well as phase barriers in the scope of delivery

Poles	Rated current i_n	Overcurrent release I_r	instant. release I_i	Article No.	Type	Packing
3	250 A	175-250 A	1250-2500 A	112681	Ex9MD3B TM 250 3P	1/2
3	315 A	220-315 A	1575-3150 A	112682	Ex9MD3B TM 315 3P	1/2
3	350 A	245-350 A	1750-3500 A	112683	Ex9MD3B TM 350 3P	1/2
3	400 A	280-400 A	2000-4000 A	112684	Ex9MD3B TM 400 3P	1/2
4	250 A	175-250 A	1250-2500 A	112685	Ex9MD3B TM 250 4P4T	1/2
4	315 A	220-315 A	1575-3150 A	112686	Ex9MD3B TM 315 4P4T	1/2
4	350 A	245-350 A	1750-3500 A	112687	Ex9MD3B TM 350 4P4T	1/2
4	400 A	280-400 A	2000-4000 A	112688	Ex9MD3B TM 400 4P4T	1/2

Version Ex9MD3S up to 400 A, I_{cu} = 35 kA

- 3 (up to 750 V DC) and 4-pole (up to 1 000 V DC) Moulded Case Circuit Breakers
- $I_{cs} = I_{cu}$ = 35 kA at 1000 V DC
- I_r can be set in range (0.7 — 1.0) × I_n
- I_i can be set in range (5 — 10) × I_n
- Mounting screws, screw type terminals as well as phase barriers in the scope of delivery

Poles	Rated current i_n	Overcurrent release I_r	instant. release I_i	Article No.	Type	Packing
3	250 A	175-250 A	1250-2500 A	112689	Ex9MD3S TM 250 3P	1/2
3	315 A	220-315 A	1575-3150 A	112690	Ex9MD3S TM 315 3P	1/2
3	350 A	245-350 A	1750-3500 A	112691	Ex9MD3S TM 350 3P	1/2
3	400 A	280-400 A	2000-4000 A	112692	Ex9MD3S TM 400 3P	1/2
4	250 A	175-250 A	1250-2500 A	112693	Ex9MD3S TM 250 4P4T	1/2
4	315 A	220-315 A	1575-3150 A	112694	Ex9MD3S TM 315 4P4T	1/2
4	350 A	245-350 A	1750-3500 A	112695	Ex9MD3S TM 350 4P4T	1/2
4	400 A	280-400 A	2000-4000 A	112696	Ex9MD3S TM 400 4P4T	1/2

Version Ex9MD3N up to 400 A, I_{cu} = 50 kA

- 3 (up to 750 V DC) and 4-pole (up to 1 000 V DC) Moulded Case Circuit Breakers
- $I_{cs} = I_{cu}$ = 50 kA at 1000 V DC
- I_r can be set in range (0.7 — 1.0) × I_n
- I_i can be set in range (5 — 10) × I_n
- Mounting screws, screw type terminals as well as phase barriers in the scope of delivery

Poles	Rated current i_n	Overcurrent release I_r	instant. release I_i	Article No.	Type	Packing
3	250 A	175-250 A	1250-2500 A	112697	Ex9MD3N TM 250 3P	1/2
3	315 A	220-315 A	1575-3150 A	112698	Ex9MD3N TM 315 3P	1/2
3	350 A	245-350 A	1750-3500 A	112699	Ex9MD3N TM 350 3P	1/2
3	400 A	280-400 A	2000-4000 A	112700	Ex9MD3N TM 400 3P	1/2
4	250 A	175-250 A	1250-2500 A	112701	Ex9MD3N TM 250 4P4T	1/2
4	315 A	220-315 A	1575-3150 A	112702	Ex9MD3N TM 315 4P4T	1/2
4	350 A	245-350 A	1750-3500 A	112703	Ex9MD3N TM 350 4P4T	1/2
4	400 A	280-400 A	2000-4000 A	112704	Ex9MD3N TM 400 4P4T	1/2

Technical data p. 114

Moulded Case Circuit Breakers Ex9M DC TM

Version Ex9MD3Q up to 400 A, I_{cu} = 70 kA

- 3 (up to 750 V DC) and 4-pole (up to 1 000 V DC) Moulded Case Circuit Breakers
- $I_{cs} = I_{cu}$ = 70 kA at 1000 V DC
- I_r can be set in range (0.7 — 1.0) × I_n
- I_i can be set in range (5 — 10) × I_n
- Mounting screws, screw type terminals as well as phase barriers in the scope of delivery

Poles	Rated current i_n	Overcurrent release I_r	instant. release I_i	Article No.	Type	Packing
3	250 A	175-250 A	1250-2500 A	112705	Ex9MD3Q TM 250 3P	1/2
3	315 A	220-315 A	1575-3150 A	112706	Ex9MD3Q TM 315 3P	1/2
3	350 A	245-350 A	1750-3500 A	112707	Ex9MD3Q TM 350 3P	1/2
3	400 A	280-400 A	2000-4000 A	112708	Ex9MD3Q TM 400 3P	1/2
4	250 A	175-250 A	1250-2500 A	112709	Ex9MD3Q TM 250 4P4T	1/2
4	315 A	220-315 A	1575-3150 A	112710	Ex9MD3Q TM 315 4P4T	1/2
4	350 A	245-350 A	1750-3500 A	112711	Ex9MD3Q TM 350 4P4T	1/2
4	400 A	280-400 A	2000-4000 A	112712	Ex9MD3Q TM 400 4P4T	1/2

Version Ex9MD3H up to 400 A, I_{cu} = 100 kA

- 3 (up to 750 V DC) and 4-pole (up to 1 000 V DC) Moulded Case Circuit Breakers
- $I_{cs} = I_{cu}$ = 100 kA at 1000 V DC
- I_r can be set in range (0.7 — 1.0) × I_n
- I_i can be set in range (5 — 10) × I_n
- Mounting screws, screw type terminals as well as phase barriers in the scope of delivery

Poles	Rated current i_n	Overcurrent release I_r	instant. release I_i	Article No.	Type	Packing
3	250 A	175-250 A	1250-2500 A	112713	Ex9MD3H TM 250 3P	1/2
3	315 A	220-315 A	1575-3150 A	112714	Ex9MD3H TM 315 3P	1/2
3	350 A	245-350 A	1750-3500 A	112715	Ex9MD3H TM 350 3P	1/2
3	400 A	280-400 A	2000-4000 A	112716	Ex9MD3H TM 400 3P	1/2
4	250 A	175-250 A	1250-2500 A	112717	Ex9MD3H TM 250 4P4T	1/2
4	315 A	220-315 A	1575-3150 A	112718	Ex9MD3H TM 315 4P4T	1/2
4	350 A	245-350 A	1750-3500 A	112719	Ex9MD3H TM 350 4P4T	1/2
4	400 A	280-400 A	2000-4000 A	112720	Ex9MD3H TM 400 4P4T	1/2

Technical data p. 114

Moulded Case Circuit Breakers Ex9M DC TM

Version Ex9MD4B up to 630 A, I_{cu} = 25 kA

- 3 (up to 750 V DC) and 4-pole (up to 1 000 V DC) Moulded Case Circuit Breakers
- $I_{cs} = I_{cu}$ = 25 kA at 1000 V DC
- I_r can be set in range (0.7 — 1.0) × I_n
- I_i can be set in range (5 — 10) × I_n
- Mounting screws, screw type terminals as well as phase barriers in the scope of delivery

Poles	Rated current i_n	Overcurrent release I_r	instant. release I_i	Article No.	Type	Packing
3	400 A	280-400 A	2000-4000 A	112721	Ex9MD4B TM 400 3P	1/1
3	500 A	350-500 A	2500-5000 A	112722	Ex9MD4B TM 500 3P	1/1
3	630 A	441-630 A	3150-6300 A	112723	Ex9MD4B TM 630 3P	1/1
4	400 A	280-400 A	2000-4000 A	112724	Ex9MD4B TM 400 4P4T	1/1
4	500 A	350-500 A	2500-5000 A	112725	Ex9MD4B TM 500 4P4T	1/1
4	630 A	441-630 A	3150-6300 A	112726	Ex9MD4B TM 630 4P4T	1/1

Version Ex9MD4S up to 630 A, I_{cu} = 36 kA

- 3 (up to 750 V DC) and 4-pole (up to 1 000 V DC) Moulded Case Circuit Breakers
- $I_{cs} = I_{cu}$ = 36 kA at 1000 V DC
- I_r can be set in range (0.7 — 1.0) × I_n
- I_i can be set in range (5 — 10) × I_n
- Mounting screws, screw type terminals as well as phase barriers in the scope of delivery

Poles	Rated current i_n	Overcurrent release I_r	instant. release I_i	Article No.	Type	Packing
3	400 A	280-400 A	2000-4000 A	112727	Ex9MD4S TM 400 3P	1/1
3	500 A	350-500 A	2500-5000 A	112728	Ex9MD4S TM 500 3P	1/1
3	630 A	441-630 A	3150-6300 A	112729	Ex9MD4S TM 630 3P	1/1
4	400 A	280-400 A	2000-4000 A	112730	Ex9MD4S TM 400 4P4T	1/1
4	500 A	350-500 A	2500-5000 A	112731	Ex9MD4S TM 500 4P4T	1/1
4	630 A	441-630 A	3150-6300 A	112732	Ex9MD4S TM 630 4P4T	1/1

Version Ex9MD4N up to 630 A, I_{cu} = 50 kA

- 3 (up to 750 V DC) and 4-pole (up to 1 000 V DC) Moulded Case Circuit Breakers
- $I_{cs} = I_{cu}$ = 50 kA at 1000 V DC
- I_r can be set in range (0.7 — 1.0) × I_n
- I_i can be set in range (5 — 10) × I_n
- Mounting screws, screw type terminals as well as phase barriers in the scope of delivery

Poles	Rated current i_n	Overcurrent release I_r	instant. release I_i	Article No.	Type	Packing
3	400 A	280-400 A	2000-4000 A	112733	Ex9MD4N TM 400 3P	1/1
3	500 A	350-500 A	2500-5000 A	112734	Ex9MD4N TM 500 3P	1/1
3	630 A	441-630 A	3150-6300 A	112735	Ex9MD4N TM 630 3P	1/1
4	400 A	280-400 A	2000-4000 A	112736	Ex9MD4N TM 400 4P4T	1/1
4	500 A	350-500 A	2500-5000 A	112737	Ex9MD4N TM 500 4P4T	1/1
4	630 A	441-630 A	3150-6300 A	112738	Ex9MD4N TM 630 4P4T	1/1

Technical data p. 118

Moulded Case Circuit Breakers Ex9M DC TM

Version Ex9MD4Q up to 630 A, I_{cu} = 70 kA

- 3 (up to 750 V DC) and 4-pole (up to 1 000 V DC) Moulded Case Circuit Breakers
- $I_{cs} = I_{cu}$ = 70 kA at 1000 V DC
- I_r can be set in range (0.7 — 1.0) × I_n
- I_i can be set in range (5 — 10) × I_n
- Mounting screws, screw type terminals as well as phase barriers in the scope of delivery

Poles	Rated current i_n	Overcurrent release I_r	instant. release I_i	Article No.	Type	Packing
3	400 A	280-400 A	2000-4000 A	112739	Ex9MD4Q TM 400 3P	1/1
3	500 A	350-500 A	2500-5000 A	112740	Ex9MD4Q TM 500 3P	1/1
3	630 A	441-630 A	3150-6300 A	112741	Ex9MD4Q TM 630 3P	1/1
4	400 A	280-400 A	2000-4000 A	112742	Ex9MD4Q TM 400 4P4T	1/1
4	500 A	350-500 A	2500-5000 A	112743	Ex9MD4Q TM 500 4P4T	1/1
4	630 A	441-630 A	3150-6300 A	112744	Ex9MD4Q TM 630 4P4T	1/1

Version Ex9MD4H up to 630 A, I_{cu} = 100 kA

- 3 (up to 750 V DC) and 4-pole (up to 1 000 V DC) Moulded Case Circuit Breakers
- $I_{cs} = I_{cu}$ = 100 kA at 1000 V DC
- I_r can be set in range (0.7 — 1.0) × I_n
- I_i can be set in range (5 — 10) × I_n
- Mounting screws, screw type terminals as well as phase barriers in the scope of delivery

Poles	Rated current i_n	Overcurrent release I_r	instant. release I_i	Article No.	Type	Packing
3	400 A	280-400 A	2000-4000 A	112745	Ex9MD4H TM 400 3P	1/1
3	500 A	350-500 A	2500-5000 A	112746	Ex9MD4H TM 500 3P	1/1
3	630 A	441-630 A	3150-6300 A	112747	Ex9MD4H TM 630 3P	1/1
4	400 A	280-400 A	2000-4000 A	112748	Ex9MD4H TM 400 4P4T	1/1
4	500 A	350-500 A	2500-5000 A	112749	Ex9MD4H TM 500 4P4T	1/1
4	630 A	441-630 A	3150-6300 A	112750	Ex9MD4H TM 630 4P4T	1/1

Technical data p. 118

Moulded Case Circuit Breakers Ex9M DC TM

Version Ex9MD5B up to 800 A, I_{cu} = 25 kA

- 3 (up to 750 V DC) and 4-pole (up to 1 000 V DC) Moulded Case Circuit Breakers
- $I_{cs} = I_{cu}$ = 25 kA at 1000 V DC
- I_r can be set in range (0.7 — 1.0) × I_n
- I_i can be set in range (5 — 10) × I_n
- Mounting screws, screw type terminals as well as phase barriers in the scope of delivery

Poles	Rated current i_n	Overcurrent release I_r	instant. release I_i	Article No.	Type	Packing
3	630 A	441-630 A	3150-6300 A	112751	Ex9MD5B TM 630 3P	1/1
3	700 A	490-700 A	3500-7000 A	112752	Ex9MD5B TM 700 3P	1/1
3	800 A	560-800 A	4000-8000 A	112753	Ex9MD5B TM 800 3P	1/1
4	630 A	441-630 A	3150-6300 A	112754	Ex9MD5B TM 630 4P4T	1/1
4	700 A	490-700 A	3500-7000 A	112755	Ex9MD5B TM 700 4P4T	1/1
4	800 A	560-800 A	4000-8000 A	112756	Ex9MD5B TM 800 4P4T	1/1

Version Ex9MD5S up to 800 A, I_{cu} = 36 kA

- 3 (up to 750 V DC) and 4-pole (up to 1 000 V DC) Moulded Case Circuit Breakers
- $I_{cs} = I_{cu}$ = 36 kA at 1000 V DC
- I_r can be set in range (0.7 — 1.0) × I_n
- I_i can be set in range (5 — 10) × I_n
- Mounting screws, screw type terminals as well as phase barriers in the scope of delivery

Poles	Rated current i_n	Overcurrent release I_r	instant. release I_i	Article No.	Type	Packing
3	630 A	441-630 A	3150-6300 A	112757	Ex9MD5S TM 630 3P	1/1
3	700 A	490-700 A	3500-7000 A	112758	Ex9MD5S TM 700 3P	1/1
3	800 A	560-800 A	4000-8000 A	112759	Ex9MD5S TM 800 3P	1/1
4	630 A	441-630 A	3150-6300 A	112760	Ex9MD5S TM 630 4P4T	1/1
4	700 A	490-700 A	3500-7000 A	112761	Ex9MD5S TM 700 4P4T	1/1
4	800 A	560-800 A	4000-8000 A	112762	Ex9MD5S TM 800 4P4T	1/1

Version Ex9MD5N up to 800 A, I_{cu} = 50 kA

- 3 (up to 750 V DC) and 4-pole (up to 1 000 V DC) Moulded Case Circuit Breakers
- $I_{cs} = I_{cu}$ = 50 kA at 1000 V DC
- I_r can be set in range (0.7 — 1.0) × I_n
- I_i can be set in range (5 — 10) × I_n
- Mounting screws, screw type terminals as well as phase barriers in the scope of delivery

Poles	Rated current i_n	Overcurrent release I_r	instant. release I_i	Article No.	Type	Packing
3	630 A	441-630 A	3150-6300 A	112763	Ex9MD5N TM 630 3P	1/1
3	700 A	490-700 A	3500-7000 A	112764	Ex9MD5N TM 700 3P	1/1
3	800 A	560-800 A	4000-8000 A	112765	Ex9MD5N TM 800 3P	1/1
4	630 A	441-630 A	3150-6300 A	112766	Ex9MD5N TM 630 4P4T	1/1
4	700 A	490-700 A	3500-7000 A	112767	Ex9MD5N TM 700 4P4T	1/1
4	800 A	560-800 A	4000-8000 A	112768	Ex9MD5N TM 800 4P4T	1/1

Technical data p. 122

Moulded Case Circuit Breakers Ex9M DC TM

Version Ex9MD5Q up to 800 A, I_{cu} = 70 kA

- 3 (up to 750 V DC) and 4-pole (up to 1 000 V DC) Moulded Case Circuit Breakers
- $I_{cs} = I_{cu}$ = 70 kA at 1000 V DC
- I_r can be set in range (0.7 — 1.0) × I_n
- I_i can be set in range (5 — 10) × I_n
- Mounting screws, screw type terminals as well as phase barriers in the scope of delivery

Poles	Rated current i_n	Overcurrent release I_r	instant. release I_i	Article No.	Type	Packing
3	630 A	441-630 A	3150-6300 A	112769	Ex9MD5Q TM 630 3P	1/1
3	700 A	490-700 A	3500-7000 A	112770	Ex9MD5Q TM 700 3P	1/1
3	800 A	560-800 A	4000-8000 A	112771	Ex9MD5Q TM 800 3P	1/1
4	630 A	441-630 A	3150-6300 A	112772	Ex9MD5Q TM 630 4P4T	1/1
4	700 A	490-700 A	3500-7000 A	112773	Ex9MD5Q TM 700 4P4T	1/1
4	800 A	560-800 A	4000-8000 A	112774	Ex9MD5Q TM 800 4P4T	1/1

Version Ex9MD5H up to 800 A, I_{cu} = 100 kA

- 3 (up to 750 V DC) and 4-pole (up to 1 000 V DC) Moulded Case Circuit Breakers
- $I_{cs} = I_{cu}$ = 100 kA at 1000 V DC
- I_r can be set in range (0.7 — 1.0) × I_n
- I_i can be set in range (5 — 10) × I_n
- Mounting screws, screw type terminals as well as phase barriers in the scope of delivery

Poles	Rated current i_n	Overcurrent release I_r	instant. release I_i	Article No.	Type	Packing
3	630 A	441-630 A	3150-6300 A	112775	Ex9MD5H TM 630 3P	1/1
3	700 A	490-700 A	3500-7000 A	112776	Ex9MD5H TM 700 3P	1/1
3	800 A	560-800 A	4000-8000 A	112777	Ex9MD5H TM 800 3P	1/1
4	630 A	441-630 A	3150-6300 A	112778	Ex9MD5H TM 630 4P4T	1/1
4	700 A	490-700 A	3500-7000 A	112779	Ex9MD5H TM 700 4P4T	1/1
4	800 A	560-800 A	4000-8000 A	112780	Ex9MD5H TM 800 4P4T	1/1

Technical data p. 122

DC fuse disconnectors Ex9FP

- **DC fuse disconnectors**
- **Suitable for PV systems**
- **Rated short-circuit breaking capacity I_{cn} with appropriate fuse-link up to 33 kA**
- **Rated current up to 30 A**
- **Rated operational voltage 1000 V DC**
- **Optical tripping indicator**
- **Fuse-links of size 10 x 38 mm**
- **1 and 2-pole variants**
- **Utilization category DC-20B**

Fuse disconnectors Ex9FP for photovoltaic string protection against short circuit and overload. Suitable for cylindrical fuse-links of size 10 x 38 mm.

LED optical tripping indicator on the front side is signaling the fuse fault.

Type Key

Ex9	FP	1P	30A
Product family	Product	Poles	Max. rated current
Ex9	DC fuse disconnector	1, 2	30 A

Certification marks

CE

DC fuse disconnectors Ex9FP

1-pole

Poles	Article No.	Type	Packing
1	101766	Ex9FP 1P 30A	1/12/144

2-pole

Poles	Article No.	Type	Packing
2	101767	Ex9FP 2P 30A	1/6/72

Technical data p. 126

DC isolators Ex9IP

- **DC modular isolators**
- **Non-polarized, suitable for PV systems**
- **Rated current up to 63 A**
- **Rated voltage up to 1000 V DC (250 V DC per pole/module)**
- **Rated short-time withstand current Icw = 12 x Ie, 1 s**
- **Meet requirements of IEC / EN 60947-3**
- **Width 1 to 4 modules**
- **Utilization category DC-22B**
- **Wide range of accessories**

DC isolators Ex9IP can be used as a main switch in photovoltaic and similar applications. These switches are tested according to IEC / EN 60947-3 standards and fulfill also requirements for isolation function.

Ex9IP isolators can be also combined with wide range of accessories including auxiliary and signal contacts, shunt trip and undervoltage releases.

Type Key

Ex9	IP	1P	32A
Product family	Product	Module width	Rated current
Ex9	DC Isolator	1, 2, 3, 4	16, 32, 50, 63

Certification marks

CE

DC Isolators Ex9IP

Accessories

Aux. or signal contacts
AX, AL, AXL
Up to 3 units

Voltage or trip releases
SHT, UVT
Up to 2 units

Isolator
Ex9IP
1, 2, 3, 4-module width

Auxiliary contacts AX31	see Installation devices catalogue
Shunt trip releases SHT31	see Installation devices catalogue
Undervoltage releases UVT31	see Installation devices catalogue

All accessories are mounted to the Ex9IP isolators from the left and are same as for Ex9B circuit breakers. The undervoltage release UVT in PV system is intended e.g. for safe remote disconnection of DC part from installation.

DC Isolators Ex9IP

1-module, 250 V DC

Rated current	Width	Article No.	Type	Packing
16 A	1 MU	101750	Ex9IP 1P 16A	1/12/144
32 A	1 MU	101751	Ex9IP 1P 32A	1/12/144
50 A	1 MU	101752	Ex9IP 1P 50A	1/12/144
63 A	1 MU	101753	Ex9IP 1P 63A	1/12/144

2-module, 500 V DC

Rated current	Width	Article No.	Type	Packing
16 A	2 MU	101754	Ex9IP 2P 16A	1/6/72
32 A	2 MU	101755	Ex9IP 2P 32A	1/6/72
50 A	2 MU	101756	Ex9IP 2P 50A	1/6/72
63 A	2 MU	101757	Ex9IP 2P 63A	1/6/72

3-module, 750 V DC

Rated current	Width	Article No.	Type	Packing
16 A	3 MU	101758	Ex9IP 3P 16A	1/4/48
32 A	3 MU	101759	Ex9IP 3P 32A	1/4/48
50 A	3 MU	101760	Ex9IP 3P 50A	1/4/48
63 A	3 MU	101761	Ex9IP 3P 63A	1/4/48

4-module, 1000 V DC

Rated current	Width	Article No.	Type	Packing
16 A	4 MU	101762	Ex9IP 4P 16A	1/3/36
32 A	4 MU	101763	Ex9IP 4P 32A	1/3/36
50 A	4 MU	101764	Ex9IP 4P 50A	1/3/36
63 A	4 MU	101765	Ex9IP 4P 63A	1/3/36

Technical data p. 128

Notes

DC MCCB Switch Disconnectors Ex9MSD

- **DC MCCB Switch Disconnectors**
- **Frame sizes M1-M6**
- **Rated operating current up to 1600 A**
- **Tested according to EN 60947-3**
- **DC current character**
- **3 and 4-pole versions**
- **Rated voltage 750 V DC (3-pole) and 1000 V DC (4-pole)**

DC versions of MCCB based Switch Disconnectors Ex9MSD are used as a main switch in DC applications, such as PV installations. Testing according to IEC / EN 60947-3 standards ensures functions and reliability for wide variety of applications.

These switch disconnectors follows the same design pattern than their circuit breaker equivalents. Therefore there is possibility to use the fully compatible range of external and internal accessories including extended rotary handles, auxiliary contacts, tripping units and many others.

Type Key

Ex9	M	2	SD	DC	4P
Product family	Product family	Frame size	Function	Current character	Poles
Ex9	M: MCCB	1: to 160 A 2: to 250 A 3: to 400 A 4: to 630 A 5: to 800 A 6: to 1600 A	Switch Disconnector	DC	3P: 3-pole 4P: 4-pole

Certification marks

CE

DC MCCB Switch Disconnectors Ex9MSD

Internal accessories Ex9M1-M5 DC SD

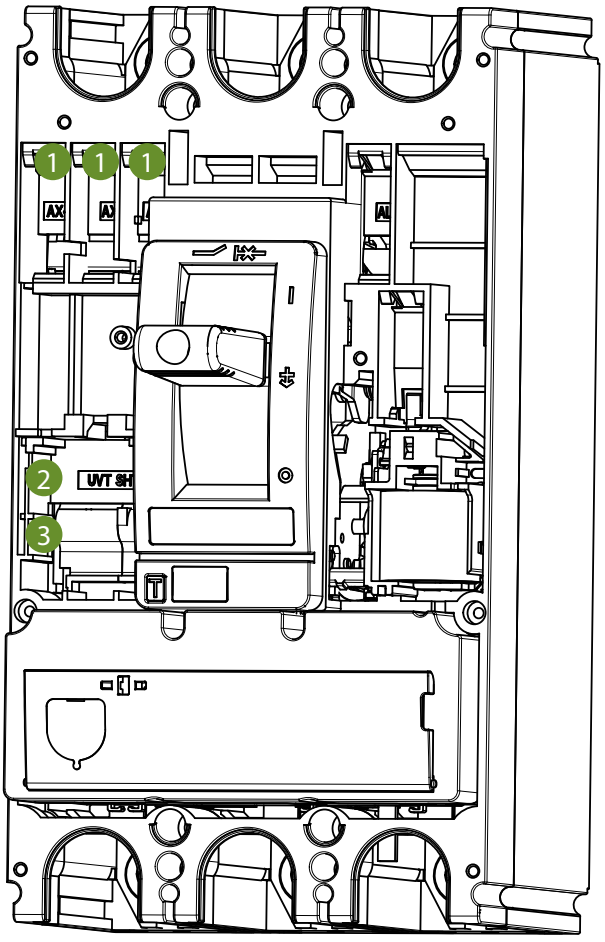

1	2	3
Auxiliary contact **AX21M**	Shunt trip release **SHT2*i*** 1 unit or UVT2*i*	Undervoltage release **UVT2*i*** 1 unit or SHT2*i*

Auxiliary contact AX21M	see Moulded Case Circuit Breakers catalogue
Shunt trip releases SHT2*i*	see Moulded Case Circuit Breakers catalogue
Undervoltage releases UVT2*i*	see Moulded Case Circuit Breakers catalogue

All internal accessories for frame sizes M2 and M3 as well as M4 and M5 are the same.

DC MCCB Switch Disconnectors Ex9MSD

External accessories Ex9M1-M5 DC SD

Phase barriers
PB2*i*

Terminal cover set, short
TCV2*i*

Terminal cover set, long
TCE2*i*

Remote operator
MOD2*i*

Direct rotary handle
RHD2*i*

Extended rotary handle
ERH2*i*

Phase barriers PHS2*i*	see Moulded Case Circuit Breakers catalogue
Terminal cover, short TCV2*i*	see Moulded Case Circuit Breakers catalogue
Remote operators MOD2*i*	see Moulded Case Circuit Breakers catalogue
Extended rotary handles ERH2*i*	see Moulded Case Circuit Breakers catalogue
Terminal cover, long TCE2*i*	see Moulded Case Circuit Breakers catalogue
Direct rotary handles RHD2*i*	see Moulded Case Circuit Breakers catalogue

DC MCCB Switch Disconnectors Ex9MSD

External accessories Ex9M1-M5 DC SD

Tunnel terminals
MC2*i* W

Mounting depth spacers
WG *i*

Screw type terminals
MC2*i*

Screw terminals
MCS2*i*

Din rail adapter
DRA2*i*

Tunnel terminals MC2*i* W	see Moulded Case Circuit Breakers catalogue
Mounting depth spacers WG *i*	see Moulded Case Circuit Breakers catalogue
Screw type terminals MC2*i*	see Moulded Case Circuit Breakers catalogue
Screw terminals MCS2*i*	see Moulded Case Circuit Breakers catalogue
Din rail DRA2*i*	see Moulded Case Circuit Breakers catalogue

DC MCCB Switch Disconnectors Ex9M6SD

Internal accessories Ex9M6 DC SD

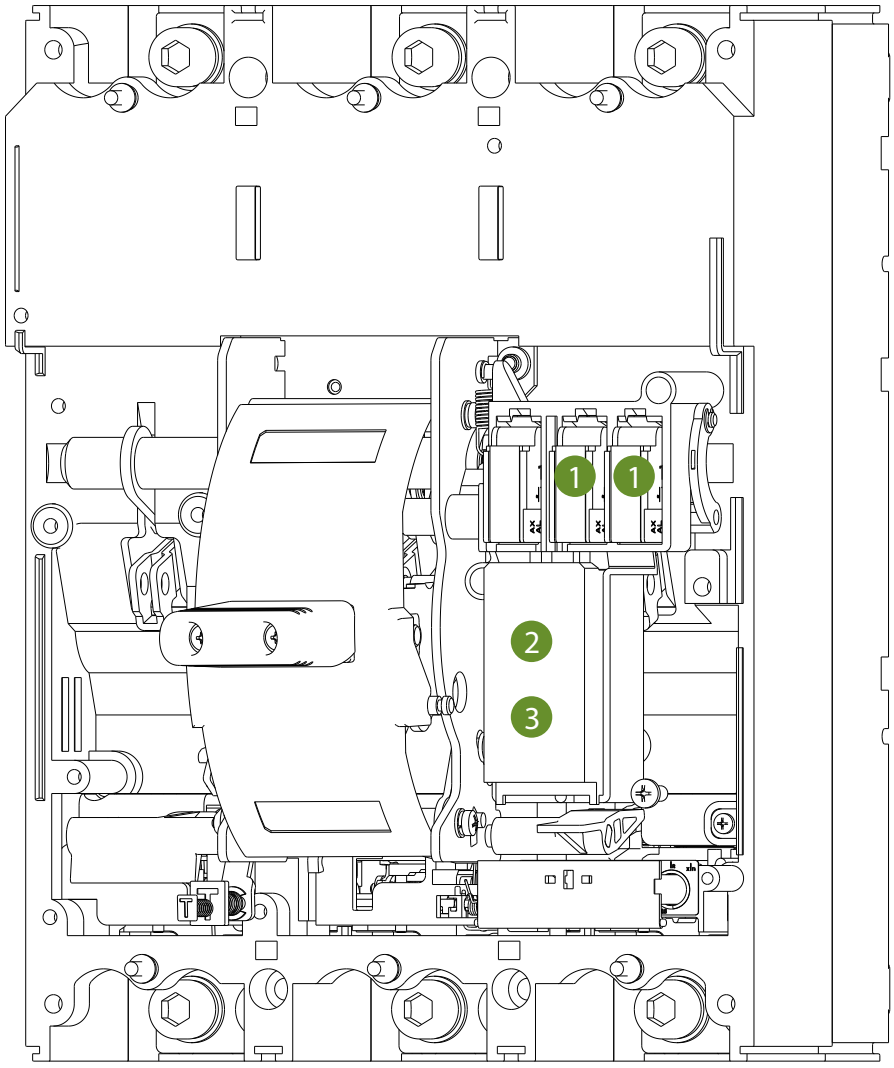

1	2	3
Auxiliary contact **AX21M**	Shunt trip release **SHT26** 1 unit or UVT2*i*	Undervoltage release **UVT26** 1 unit or SHT2*i*

Auxiliary contact AX21M	see Moulded Case Circuit Breakers catalogue
Shunt trip releases SHT26	see Moulded Case Circuit Breakers catalogue
Undervoltage releases UVT26	see Moulded Case Circuit Breakers catalogue

DC MCCB Switch Disconnectors Ex9M6SD

External accessories Ex9M6 DC SD

Extended rotatory handle
ERH26

Extended handle
LHD26

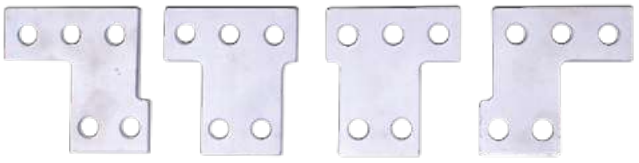

Front connection plate
JP26

Extended rotary handles ERH26	see Installation devices catalogue
Extended handles LHD26	see Installation devices catalogue
Front connection plate JP26	see Installation devices catalogue

DC MCCB Switch Disconnectors Ex9MSD

3-pole versions

- Mounting screws, screw type terminals as well as phase barriers in the scope of delivery

Rated current i_n	Frame size	Article No.	Type	Packing
160 A	M1	112799	Ex9M1SD DC 3P	1/8
250 A	M2	112803	Ex9M2SD DC 3P	1/8
400 A	M3	112807	Ex9M3SD DC 3P	1/2
630 A	M4	112811	Ex9M4SD DC 3P	1
800 A	M5	112815	Ex9M5SD DC 3P	1
800 A	M6	112831	Ex9M6SD DC800 3P	1
1 000 A	M6	112825	Ex9M6SD DC1000 3P	1
1 250 A	M6	112827	Ex9M6SD DC1250 3P	1
1 600 A	M6	112829	Ex9M6SD DC1600 3P	1

4-pole versions

- Mounting screws, screw type terminals as well as phase barriers in the scope of delivery

Rated current i_n	Frame size	Article No.	Type	Packing
160 A	M1	112800	Ex9M1SD DC 4P	1/8
250 A	M2	112804	Ex9M2SD DC 4P	1/8
400 A	M3	112808	Ex9M3SD DC 4P	1/2
630 A	M4	112812	Ex9M4SD DC 4P	1
800 A	M5	112816	Ex9M5SD DC 4P	1
800 A	M6	112832	Ex9M6SD DC800 4P	1
1 000 A	M6	112826	Ex9M6SD DC1000 4P	1
1 250 A	M6	112828	Ex9M6SD DC1250 4P	1
1 600 A	M6	112830	Ex9M6SD DC1600 4P	1

Technical data p. 130

Notes

B type RCCBs Ex9LB63

- **Residual Current Circuit Breakers according to IEC/EN 61008-1 and IEC/EN 62423**
- **Cond. rated short circuit strength I_{nc} 10 kA**
- **B type**
- **2 and 4-pole versions**
- **Rated residual current 30, 100 and 300 mA**
- **Rated current up to 63 A**
- **Rated operational voltage 230/400 V AC**
- **Indication of electrical tripping**
- **Suitable for applications from -25 to +40 °C**

Residual current circuit breakers B type Ex9LB63 are suitable for domestic as well as industrial applications, where are used frequency inveters, PV plant, EV chargers and similar elements. B type provides a sensitivity to residual AC, pulsating and smooth DC current, together with high frequencies up to 1 kHz.

They are based on electronic technology, which brings advantages of more accurate measuring of residual current and, as a consequence, reduction of unwanted tripping. These devices also do not suffer with magnetization of the tripping unit. Thus, there is no mandatory testing period, but they must be tested regularly. On this testing period local law or regulations may apply. Recommend is to test it every 6 months in fair enviroment and every month in heavy condition.

Type Key

Ex9	LB63		1P+N	40A	30mA
Product family	Product	Conditional short circuit strength	Poles	Rated current	Rated residual current
Ex9	LB63: RCCB type B	_ : 10 kA	1P+N 3P+N	25 A 40 A 63 A	30 mA 100 mA 300 mA

Certification marks

B type RCCBs Ex9LB63

B type, 2-pole

- B type - sensitivity to residual AC, pulsating and smooth DC current, high frequency up to 1 kHz
- Without time delay
- Surge current-proof 3000 A
- 30 mA version suitable for protection of people in case of direct and indirect contact with live parts and exposed conductive parts during a fault, respectively

Rated current	Rated residual current	Poles	Article No.	Type	Packing
25 A	30 mA	2	110212	Ex9LB63 1P+N 25A 30mA	1/72
40 A	30 mA	2	110213	Ex9LB63 1P+N 40A 30mA	1/72
63 A	30 mA	2	110214	Ex9LB63 1P+N 63A 30mA	1/72
25 A	100 mA	2	110215	Ex9LB63 1P+N 25A 100mA	1/72
40 A	100 mA	2	110216	Ex9LB63 1P+N 40A 100mA	1/72
63 A	100 mA	2	110217	Ex9LB63 1P+N 63A 100mA	1/72
25 A	300 mA	2	110218	Ex9LB63 1P+N 25A 300mA	1/72
40 A	300 mA	2	110219	Ex9LB63 1P+N 40A 300mA	1/72
63 A	300 mA	2	110220	Ex9LB63 1P+N 63A 300mA	1/72

B type, 4-pole

Rated current	Rated residual current	Poles	Article No.	Type	Packing
25 A	30 mA	4	110221	Ex9LB63 3P+N 25A 30mA	1/45
40 A	30 mA	4	110222	Ex9LB63 3P+N 40A 30mA	1/45
63 A	30 mA	4	110223	Ex9LB63 3P+N 63A 30mA	1/45
25 A	100 mA	4	110224	Ex9LB63 3P+N 25A 100mA	1/45
40 A	100 mA	4	110225	Ex9LB63 3P+N 40A 100mA	1/45
63 A	100 mA	4	110226	Ex9LB63 3P+N 63A 100mA	1/45
25 A	300 mA	4	110227	Ex9LB63 3P+N 25A 300mA	1/45
40 A	300 mA	4	110228	Ex9LB63 3P+N 40A 300mA	1/45
63 A	300 mA	4	110229	Ex9LB63 3P+N 63A 300mA	1/45

Technical data p. 148

Smart Energy Meters Ex9EMS

- **Smart Energy Meters according to EN 50470-1/3**
- **MID certification**
- **Mounting on DIN rails**
- **Operating voltage Ue 230/400 V AC**
- **Fixed rated current or adjustable by CT**
- **1 or 2-tariff versions**
- **LCD display**
- **Optional M-Bus or ModBus communication**
- **1, 2 or 4-module width versions**
- **Infrared eye**
- **Software and hardware for IR communication**

Energy Meters Ex9EMS are smart meters of electric energy. We provide wide range of types with various parameters. Rated current can be fixed or adjustable by Current Transformer. LCD display is a matter of course together with infrared eye for easy read out. Possibility of M-Bus or ModBus communication do from energy meters proper smart device.

Installation Smart Energy Meters Ex9EMS are suitable for residential and industrial applications. The biggest advatage is mounting on DIN rails inside cunsomer units. They will find their use everywhere where it is needed to count consumed energy.

We offer even cable for IR communication and software can be downloaded from our website.

Energy meters are offered in 1, 2 or 4-modules width versions.

Type Key

Ex9	EMS	1P	1M	45A	_	1T
Product family	Product	Poles	Modules	Rated current	Communication	Tariffs
Ex9	EMS: Smart Energy Meters	1P 3P	1M 2M 4M	45A 100A CT: current transformer	_: _ MB: M-Bus MO: ModBus	1T: 1 tariff 2T: 2 tariffs

Certification marks

Smart Energy Meters Ex9EMS

Smart Energy Meters - 1 pole 1 module

- 1 or 2-tariff versions
- Optional M-Bus or ModBus communication
- Direct connection
- Width 1MU

Rated current	Communication	Article No.	Type	Packing
45A	-	107287	Ex9EMS 1P 1M 45A 1T	1/1/60
45A	-	107288	Ex9EMS 1P 1M 45A 2T	1/1/60
45A	M-Bus	107289	Ex9EMS 1P 1M 45A MB 2T	1/1/60
45A	ModBus	107290	Ex9EMS 1P 1M 45A MO 2T	1/1/60

Smart Energy Meters - 1 pole 2 modules

- 1 or 2-tariff versions
- Optional M-Bus or ModBus communication
- Direct connection
- Width 2MU

Rated current	Communication	Article No.	Type	Packing
100A	-	107291	Ex9EMS 1P 2M 100A 1T	1/1/48
100A	-	107292	Ex9EMS 1P 2M 100A 2T	1/1/48
100A	M-Bus	107293	Ex9EMS 1P 2M 100A MB 2T	1/1/48
100A	ModBus	107294	Ex9EMS 1P 2M 100A MO 2T	1/1/48

Smart Energy Meters - 3 poles 4 modules

- Optional M-Bus or ModBus communication
- Direct or CT connection
- Width 4MU

Rated current	Communication	Article No.	Type	Packing
100A	-	107295	Ex9EMS 3P 4M 100A 2T	1/1/36
100A	M-Bus	107296	Ex9EMS 3P 4M 100A MB 2T	1/1/36
100A	ModBus	107297	Ex9EMS 3P 4M 100A MO 2T	1/1/36
CT	-	107298	Ex9EMS 3P 4M CT 2T	1/1/36
CT	M-Bus	107299	Ex9EMS 3P 4M CT MB 2T	1/1/36
CT	ModBus	107300	Ex9EMS 3P 4M CT MO 2T	1/1/36

Technical data p. 151

Smart Energy Meters Ex9EMS

IR connecting cable

- Infrared connecting cable with USB
- Magnetic connection with bracket to prevent movement
- Need to use a bracket

Description	Article No.	Type	Packing
IR connecting cable with USB	109855	IR USB	1

Bracket for IR cable

- Size depends on modular width of EMS energy meter

For energy meters	Article No.	Type	Packing
Ex9EMS 1P 1M	109856	IR BR 1M	1
Ex9EMS 1P 2M	109857	IR BR 2M	1
Ex9EMS 3P 4M	109858	IR BR 4M	1

Notes

DC surge protection devices Ex9UEP

- **DC Surge Protection Devices suitable for Photovoltaic systems**
- **PV T2 (Class II, Type 2, C) class SPDs**
- **Meet requirements of EN 50539-11**
- **Nominal discharge current I_n 20 kA (8/20 µs) per path**
- **Maximum discharge current I_{max} 40 kA (8/20 µs)**
- **Max. continuous operational voltage UCPV from 600 to 1500 V DC**
- **For grounded and ungrounded PV systems**
- **Plug-in module design with status indication**
- **Optional remote indication contact**

DC Surge protection devices Ex9UEP are suitable for photovoltaic applications. These SPDs are designed and tested according PV T2 class from EN 50539-11 standard.

Indication front window helps users to know the status of device and remote-signal port is able to provide remote indication and alarm.

Plug-in module design make it convenient to change module without device disconnection.

Type Key

Ex9	UEP		20	R	3P	1200	
Product family	Product	Class	Current	Signaling contact	Module width	Max. oper. voltage	Plug-in module
Ex9	UEP: DC Surge Protective Devices	_: PV T2 class II C T2	I_n (8/20 µs) 20 kA	R: Yes _: No	1P: 1 MU 2P: 2 MU 3P: 3 MU	600 V DC 750 V DC 1000 V DC 1200 V DC 1500 V DC	_: Complete device M: Plug-in module only

Certification marks

CE

DC surge protection devices Ex9UEP

Complete devices for grounded PV systems, 1-pole

Max. oper. voltage U_{CPV}	Connection configuration	Signaling contact	Article No.	Type	Packing
600 V DC	I	no	108016	Ex9UEP 20 1P 600	1/96
600 V DC	I	yes	108017	Ex9UEP 20R 1P 600	1/96
750 V DC	I	no	110171	Ex9UEP 20 1P 750	1/96
750 V DC	I	yes	110172	Ex9UEP 20R 1P 750	1/96

Connection diagram:

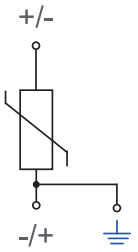

Complete devices for ungrounded PV systems, 2-pole

Max. oper. voltage U_{CPV}	Connection configuration	Signaling contact	Article No.	Type	Packing
600 V DC	U	no	108018	Ex9UEP 20 2P 600	1/81
600 V DC	U	yes	108019	Ex9UEP 20R 2P 600	1/81
750 V DC	U	no	110173	Ex9UEP 20 2P 750	1/81
750 V DC	U	yes	110174	Ex9UEP 20R 2P 750	1/81

Connection diagram:

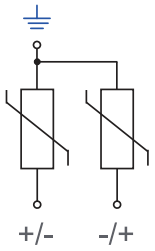

Technical data p. 156

DC surge protection devices Ex9UEP

Complete devices for grounded PV systems, 2-pole

Max. oper. voltage U_{CPV}	Connection configuration	Signaling contact	Article No.	Type	Packing
1000 V DC	U	no	110175	Ex9UEP 20 2P 1000	1/81
1000 V DC	U	yes	110176	Ex9UEP 20R 2P 1000	1/81
1200 V DC	U	no	108020	Ex9UEP 20 2P 1200	1/81
1200 V DC	U	yes	108021	Ex9UEP 20R 2P 1200	1/81
1500 V DC	U	no	110179	Ex9UEP 20 2P 1500	1/81
1500 V DC	U	yes	110180	Ex9UEP 20R 2P 1500	1/81

Connection diagram:

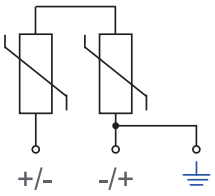

Complete devices for ungrounded PV systems, 3-pole

Max. oper. voltage U_{CPV}	Connection configuration	Signaling contact	Article No.	Type	Packing
1000 V DC	Y	no	110177	Ex9UEP 20 3P 1000	1/54
1000 V DC	Y	yes	110178	Ex9UEP 20R 3P 1000	1/54
1200 V DC	Y	no	108022	Ex9UEP 20 3P 1200	1/54
1200 V DC	Y	yes	108023	Ex9UEP 20R 3P 1200	1/54
1500 V DC	Y	no	110181	Ex9UEP 20 3P 1500	1/54
1500 V DC	Y	yes	110182	Ex9UEP 20R 3P 1500	1/54

Connection diagram:

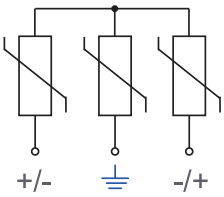

Spare plug-in module

Max. oper. voltage U_{CPV}	Suitable for device	Article No.	Type	Packing
600 V DC	Ex9UEP 20 1P 600	108024	Ex9UEP 20 1P 600 M	1
750 V DC	Ex9UEP 20 1P 750	110183	Ex9UEP 20 1P 750 M	1
600 V DC	Ex9UEP 20 2P 600	108025	Ex9UEP 20 2P 600 M	1
750 V DC	Ex9UEP 20 2P 750	110184	Ex9UEP 20 2P 750 M	1
1000 V DC	Ex9UEP 20 2P 1000	110185	Ex9UEP 20 2P 1000 M	1
1200 V DC	Ex9UEP 20 2P 1200	108026	Ex9UEP 20 2P 1200 M	1
1500 V DC	Ex9UEP 20 2P 1500	110187	Ex9UEP 20 2P 1500 M	1
1000 V DC	Ex9UEP 20 3P 1000	110186	Ex9UEP 20 3P 1000 M	1
1200 V DC	Ex9UEP 20 3P 1200	108027	Ex9UEP 20 3P 1200 M	1
1500 V DC	Ex9UEP 20 3P 1500	110188	Ex9UEP 20 3P 1500 M	1

Notes

DC Surge Protection Devices Ex9UEP1+2

- **DC Surge Protection Devices suitable for Photovoltaic systems**
- **PV T1+T2 (Class I+II, Type 1+2, B+C) class SPDs**
- **Nominal discharge current I_n 20 kA (8/20 µs) per path**
- **Maximum discharge current I_{max} 40 kA (8/20 µs)**
- **Impulse discharge current I_{imp} 6.25 kA (10/350 µs)**
- **Max. continuous operational voltage U_{CPV} from 500 to 1500 V DC**
- **For grounded and ungrounded PV systems**

DC Surge Protection Devices Ex9UEP1+2 are suitable for photovoltaic applications. These SPDs are designed and tested according PV I+II class from EN 61643-31 standard.

Indication front window helps users to know the status of device and remote-signal port is able to provide remote indication and alarm.

Plug-in module design make it convenient to change module without device disconnection.

Type Key

Ex9	UEP	1+2	6.25	R	3P	1500	
Product family	Product	Class	Current	Signaling contact	Module width	Max. oper. voltage	Plug-in module
Ex9	UEP: DC Surge Protective Devices	PV T1+T2 class I+II B+C T1+T2	I_{imp} (10/350µs) 6.25 kA	R: Yes _: No	1P: 1 MU 2P: 2 MU 3P: 3 MU	500 V DC 600 V DC 750 V DC 1000 V DC 1200 V DC 1500 V DC	_: Complete device M: Plug-in module only

Certification marks

DC Surge Protection Devices Ex9UEP1+2

Complete devices for grounded PV systems, 1-pole

Max. oper. voltage U_{CPV}	Connection configuration	Signaling contact	Article No.	Type	Packing
500 V DC	I	no	111739	Ex9UEP1+2 6.25 1P 500	1/96
500 V DC	I	yes	111740	Ex9UEP1+2 6.25R 1P 500	1/96
600 V DC	I	no	111741	Ex9UEP1+2 6.25 1P 600	1/96
600 V DC	I	yes	111742	Ex9UEP1+2 6.25R 1P 600	1/96
750 V DC	I	no	111743	Ex9UEP1+2 6.25 1P 750	1/96
750 V DC	I	yes	111744	Ex9UEP1+2 6.25R 1P 750	1/96

Connection diagram:

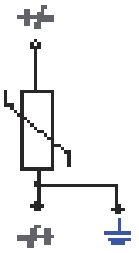

Complete devices for ungrounded PV systems, 2-pole

Max. oper. voltage U_{CPV}	Connection configuration	Signaling contact	Article No.	Type	Packing
500 V DC	U	no	111745	Ex9UEP1+2 6.25 2P 500	1/81
500 V DC	U	yes	111746	Ex9UEP1+2 6.25R 2P 500	1/81
600 V DC	U	no	111747	Ex9UEP1+2 6.25 2P 600	1/81
600 V DC	U	yes	111748	Ex9UEP1+2 6.25R 2P 600	1/81
750 V DC	U	no	111749	Ex9UEP1+2 6.25 2P 750	1/81
750 V DC	U	yes	111750	Ex9UEP1+2 6.25R 2P 750	1/81

Connection diagram:

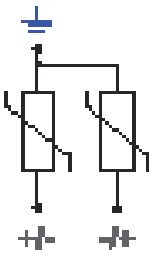

Technical data p. 159

DC Surge Protection Devices Ex9UEP1+2

Complete devices for grounded PV systems, 2-pole

Max. oper. voltage U_{CPV}	Connection configuration	Signaling contact	Article No.	Type	Packing
1000 V DC	U	no	111751	Ex9UEP1+2 6.25 2P 1000	1/81
1000 V DC	U	yes	111752	Ex9UEP1+2 6.25R 2P 1000	1/81
1200 V DC	U	no	111753	Ex9UEP1+2 6.25 2P 1200	1/81
1200 V DC	U	yes	111754	Ex9UEP1+2 6.25R 2P 1200	1/81
1500 V DC	U	no	111755	Ex9UEP1+2 6.25 2P 1500	1/81
1500 V DC	U	yes	111756	Ex9UEP1+2 6.25R 2P 1500	1/81

Connection diagram:

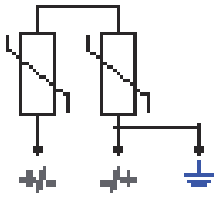

Complete devices for ungrounded PV systems, 3-pole

Max. oper. voltage U_{CPV}	Connection configuration	Signaling contact	Article No.	Type	Packing
1000 V DC	Y	no	111759	Ex9UEP1+2 6.25 3P 1000	1/54
1000 V DC	Y	yes	111760	Ex9UEP1+2 6.25R 3P 1000	1/54
1200 V DC	Y	no	111761	Ex9UEP1+2 6.25 3P 1200	1/54
1200 V DC	Y	yes	111762	Ex9UEP1+2 6.25R 3P 1200	1/54
1500 V DC	Y	no	111763	Ex9UEP1+2 6.25 3P 1500	1/54
1500 V DC	Y	yes	111764	Ex9UEP1+2 6.25R 3P 1500	1/54

Connection diagram:

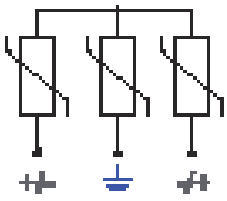

Spare plug-in module

Max. oper. voltage U_{CPV}	Suitable for device	Article No.	Type	Packing
500 V DC	Ex9UEP1+2 6.25 1P 500	111765	Ex9UEP1+2 6.25 1P 500 M	1
600 V DC	Ex9UEP1+2 6.25 1P 600	111767	Ex9UEP1+2 6.25 1P 600 M	1
750 V DC	Ex9UEP1+2 6.25 1P 750	111769	Ex9UEP1+2 6.25 1P 750 M	1
500 V DC	Ex9UEP1+2 6.25 2P 500	111771	Ex9UEP1+2 6.25 2P 500 M	1
600 V DC	Ex9UEP1+2 6.25 2P 600	111773	Ex9UEP1+2 6.25 2P 600 M	1
750 V DC	Ex9UEP1+2 6.25 2P 750	111775	Ex9UEP1+2 6.25 2P 750 M	1
1000 V DC	Ex9UEP1+2 6.25 2P 1000	111777	Ex9UEP1+2 6.25 2P 1000 M	1
1200 V DC	Ex9UEP1+2 6.25 2P 1200	111779	Ex9UEP1+2 6.25 2P 1200 M	1
1500 V DC	Ex9UEP1+2 6.25 2P 1500	111781	Ex9UEP1+2 6.25 2P 1500 M	1
1000 V DC	Ex9UEP1+2 6.25 3P 1000	111785	Ex9UEP1+2 6.25 3P 1000 M	1
1200 V DC	Ex9UEP1+2 6.25 3P 1200	111787	Ex9UEP1+2 6.25 3P 1200 M	1
1500 V DC	Ex9UEP1+2 6.25 3P 1500	111789	Ex9UEP1+2 6.25 3P 1500 M	1

Notes

Surface-mounted IP65 Consumer Units PHS

- **Surface-mounted consumer units PHS**
- **Rated oper. voltage 400 V AC, 1500 V DC**
- **Degree of protection IP65**
- **4 up to 48 modules**
- **1 up to 4 rows**
- **Transparent door**

Consumer units PHS are intended for general applications including industrial ones with requirements for high degree of IP protection. Their design is suitable for surface mounting. Scope of delivery consists of enclosure, door, device DIN rails, N + PE terminals, front cover with device cutout, cover for empty place, mounting material.

Type Key

P	H	S	8	T
Product family	Degree of protection	Version	Number of modules	Door
P: Plastic enclosure	H: IP65	S: Surface mounted	4 — 48	T: Transparent

Certification marks

Surface-mounted IP65 Consumer Units PHS

Consumer units PHS with transparent door

- Surface mounted version
- 4, 6, 8, 12 or 18 modules per row
- 1 up to 4 rows
- Scope of delivery: enclosure, door, device DIN rails, N + PE terminals, front cover with device cutout, cover for empty place, mounting material

N+PE terminals	Number of rows	Total modules	Article No.	Type	Packing
4+4	1	4	101492	PHS 4T	1
6+6	1	6	113262	PHS 6T	1
8+8	1	8	101493	PHS 8T	1
10+10	1	12	101494	PHS 12T	1
13+13	1	18	113263	PHS 18T	1
13+13	2	24	101495	PHS 24T	1
15+15	3	36	101496	PHS 36T	1
20+20	4	48	110814	PHS 48T	1

Spare door, transparent

- Spare door for consumer unit
- Suitable for PHS line of consumer units
- Packed separately

Version	For consumer units	Article No.	Type	Packing
Transparent	PHS 4T	101533	DR PHS 4T	1
Transparent	PHS 6T	113278	DR PHS 6T	1
Transparent	PHS 8T	101534	DR PHS 8T	1
Transparent	PHS 12T	101535	DR PHS 12T	1
Transparent	PHS 18T	113279	DR PHS 18T	1
Transparent	PHS 24T	101536	DR PHS 24T	1
Transparent	PHS 36T	101537	DR PHS 36T	1
Transparent	PHS 48T	111174	DR PHS 48T	1

Technical data p. 162

Surface-mounted IP65 Consumer Units PHS

Lock with key

- Lock with key
- For subsequent mounting onto enclosure door
- Metal version of lock

Version of lock	For consumer units	Article No.	Type	Packing
Metal	PHS	101571	LK PH M	1

Cover for empty place

- Cover for unused 45 mm device cutout
- White, grey or black colour
- Total width 224 mm, can be shortened
- Segmented as 1x 15 mm, 22 x 1/2 module width, 1x 15 mm

Colour	Width	Article No.	Type	Packing
White	224 mm	101574	B CC45	1/500
Grey	224 mm	113277	B CC45 G	1/500
Black	224 mm	110192	B CC45 B	1/500

Spare mounting material

- For IP65 surface mounted consumer units
- Package contains: screws, wall plugs, screw covers, stickers, empty place cover

Description	Article No.	Type	Packing
Spare mounting material, IP65	106182	SMM IP65S	1 pack

Cable grommets

- Cable grommets suitable for cutouts prepared on the enclosures
- Used material allows to use various diameter of the conductors (up to 50 mm^2)
- Packed separately

Description	Diameter	Article No.	Type	Packing
Cable grommet	16 mm	106860	CGQS M16	1
Cable grommet	20 mm	106208	CGQS M20	1
Cable grommet	25 mm	106209	CGQS M25	1
Cable grommet	32 mm	106210	CGQS M32	1

Notes

Surface-mounted IP65 Consumer Units PHS FB

- **Surface-mounted consumer units PHS**
- **Rated oper. voltage 400 V AC, 1500 V DC**
- **Degree of protection IP65**
- **Flat bottom - without marked cutouts**
- **4 up to 48 modules**
- **1 up to 4 rows**
- **Transparent door**

Consumer units PHS FB are intended for general applications including industrial ones with requirements for high degree of IP protection. Their design is suitable for surface mounting. Flat bottom version without marked cutouts. Scope of delivery consists of enclosure, door, device DIN rails, N + PE terminals, front cover with device cutout, cover for empty place, mounting material.

Type Key

P	H	S	8	T	FB
Product family	Degree of protection	Version	Number of modules	Door	Special version
P: Plastic enclosure	H: IP65	S: Surface mounted	4 — 48	T: Transparent	FB: Flat bottom

Certification marks

Surface-mounted IP65 Consumer Units PHS FB

Consumer units PHS FB with transparent door

- Surface mounted version
- 4, 6, 8, 12 or 18 modules per row
- 1 up to 4 rows
- Scope of delivery: enclosure, door, device DIN rails, N + PE terminals, front cover with device cutout, cover for empty place, mounting material

N+PE terminals	Number of rows	Total modules	Article No.	Type	Packing
4+4	1	4	110821	PHS 4T FB	1
6+6	1	6	113264	PHS 6T FB	1
8+8	1	8	109051	PHS 8T FB	1
10+10	1	12	110684	PHS 12T FB	1
10+10	1	18	113265	PHS 18T FB	1
10+10	2	24	110685	PHS 24T FB	1
10+10	3	36	110822	PHS 36T FB	1
10+10	4	48	113266	PHS 48T FB	1

Spare door, transparent

- Spare door for consumer unit
- Suitable for PHS FB line of consumer units
- Packed separately

Version	For consumer units	Article No.	Type	Packing
Transparent	PHS 4T FB	101533	DR PHS 4T	1
Transparent	PHS 6T FB	113278	DR PHS 6T	1
Transparent	PHS 8T FB	101534	DR PHS 8T	1
Transparent	PHS 12T FB	101535	DR PHS 12T	1
Transparent	PHS 18T FB	113279	DR PHS 18T	1
Transparent	PHS 24T FB	101536	DR PHS 24T	1
Transparent	PHS 36T FB	101537	DR PHS 36T	1
Transparent	PHS 48T FB	111174	DR PHS 48T	1

Technical data p. 164

Surface-mounted IP65 Consumer Units PHS FB

Lock with key

- Lock with key
- For subsequent mounting onto enclosure door
- Metal version of lock

Version of lock	For consumer units	Article No.	Type	Packing
Metal	PHS-FB, PHS	101571	LK PH M	1

Cover for empty place

- Cover for unused 45 mm device cutout
- White, grey or black colour
- Total width 224 mm, can be shortened
- Segmented as 1x 15 mm, 22 x 1/2 module width, 1x 15 mm

Colour	Width	Article No.	Type	Packing
White	224 mm	101574	B CC45	1/500
Grey	224 mm	113277	B CC45 G	1/500
Black	224 mm	110192	B CC45 B	1/500

Spare mounting material

- For IP65 surface mounted consumer units
- Package contains: screws, wall plugs, screw covers, stickers, empty place cover

Description	Article No.	Type	Packing
Spare mounting material, IP65	106182	SMM IP65S	1 pack

Cable grommets

- Cable grommets suitable for cutouts prepared on the enclosures
- Used material allows to use various diameter of the conductors (up to 50 mm^2)
- Packed separately

Description	Diameter	Article No.	Type	Packing
Cable grommet	16 mm	106860	CGQS M16	1
Cable grommet	20 mm	106208	CGQS M20	1
Cable grommet	25 mm	106209	CGQS M25	1
Cable grommet	32 mm	106210	CGQS M32	1

Fixed solution
Always connected and ready for your EV.

Unique design
Our design language will set you apart from the masses.

Reliable protection
B type RCCB integrated.

5 Year Warranty
We stand behind the quality of our products.

Plug and go
All you need is a grip plug

Manufactured in EU
The European quality standards

Wall-mounted EV chargers Ex9EV

- **Tested according to IEC/EN 61851**
- **Installation directly on wall**
- **1phase or 3phase versions**
- **Charging current up to 32 A**
- **Plug type 1 (5 pins) or type 2 (7 pins)**
- **Including RCCB B type**
- **Degree of protection IP44**

Ex9EV is a wall-mounted charger for electric vehicles (EVs) with intentions to be used in a household. Our solution is equipped with B type Residual Current Circuit Breaker, which is a neccessery protection of EV chargers. The battery of EV is working on DC principe and it can occur a DC current leakage. The internal B type RCCB is able to detect leakages in DC, AC and pulsating current in a high frequency.

We are offering a chargers with charging current up to 32 A in 1 or 3 phase connection. Connection cable with lenght of 5 m with one of two most common plugs (Type 1 or Type 2) is a part of delivery.

Type Key

Ex9	EV	1	T2	16A
Product family	Product	Number of phases	Plug type	Charging current
Ex9	EV: Wall-mounted EV charger	1 3	T1: Type 1 T2: Type 2	10 A 16 A 20 A 25 A 32 A

Certification marks

CE

Wall-mounted EV chargers Ex9EV

EV charging wallboxes

- 1phase or 3phase version
- Plug type 1 or type 2
- Charging current up to 32 A
- Integrated RCCB type B

Maximal charging current	Number of phases	Plug type CAR	Article No.	Type	Packing
10A	1 phase	Type 1	110256	Ex9EV1 T1 10A	1/4
16A	1 phase	Type 1	110494	Ex9EV1 T1 16A	1/4
20A	1 phase	Type 1	110495	Ex9EV1 T1 20A	1/4
25A	1 phase	Type 1	110496	Ex9EV1 T1 25A	1/4
32A	1 phase	Type 1	110497	Ex9EV1 T1 32A	1/4
10A	1 phase	Type 2	110257	Ex9EV1 T2 10A	1/4
16A	1 phase	Type 2	110498	Ex9EV1 T2 16A	1/4
20A	1 phase	Type 2	110499	Ex9EV1 T2 20A	1/4
25A	1 phase	Type 2	110500	Ex9EV1 T2 25A	1/4
32A	1 phase	Type 2	110501	Ex9EV1 T2 32A	1/4
10A	3 phase	Type 2	110258	Ex9EV3 T2 10A	1/4
16A	3 phase	Type 2	110502	Ex9EV3 T2 16A	1/4
20A	3 phase	Type 2	110503	Ex9EV3 T2 20A	1/4
25A	3 phase	Type 2	110504	Ex9EV3 T2 25A	1/4
32A	3 phase	Type 2	110505	Ex9EV3 T2 32A	1/4

EV plug types

Type 1

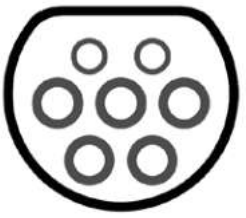

Type 2

Technical data p. 166

Cable EV chargers Ex9EVC

- **Tested according to IEC/EN 61851**
- **Mobile solution of EV charging**
- **1phase or 3phase versions**
- **Adjustable charging current up to 13/16 or 32 A**
- **EV plug Type 1 (5 pins) or Type 2 (7 pins)**
- **Grid plug UNISCHUKO, Type G 13A fused (UK standard), CEE 16A/5p or CEE 32A/5p**
- **Integrated RCCB type B**
- **All necessary protections**
- **Degree of protection IP55 (plugs IP44)**

EV charging cable Ex9EVC is a mobile solution for charging your EV (electric vehicle). It can be used as complementary charger or replace the main charger, if you don‘t want to have a wall-box installed in your facility. All you need is a grid plug. Charging current can be set before start charging so you can configure charging time and control the energy consumption.

Charging cables provide all necessary protection as temperature, overvoltage and undervoltage monitoring, checking the ground and neutral wires connection and electronic status before starting charging. The battery of EV is working on DC principe and it can occur a DC current leakage. The integrated B type RCCB is able to detect leakages in DC, AC and pulsating current in a high frequency.

All versions of cable chargers Ex9EVC are providen in 5 m length with one of the two most common plugs at the EV connection side - Type 1 and Type 2. Grid plug is depended on a number of phases and maximal charging current.

Type Key

Ex9	EVC	1	T2	16A
Product family	Product	Number of phases	Plug type	Maximal charging current
Ex9	EVC: Cable EV charger	1 3	T1: Type 1 T2: Type 2	16 A 32 A

Certification marks

CE

Cable EV chargers Ex9EVC

EV charging cables

- 1phase or 3phase versions
- Adjustable charging current up to 13/16 or 32 A
- EV plug Type 1 (5 pins) or Type 2 (7 pins)
- Grid plug UNISCHUKO, Type G 13A fused (UK standard), CEE 16A/5p or CEE 32A/5p
- Integrated RCCB type B

Maximal charging current	Number of phases	Plug type CAR	Plug type GRID	Article No.	Type	Packing
16 A	1 phase	Type 1	UNISCHUKO	110688	Ex9EVC1 T1 16A	1
16 A	1 phase	Type 2	UNISCHUKO	110689	Ex9EVC1 T2 16A	1
32 A	1 phase	Type 1	CEE 32A/5p	110690	Ex9EVC1 T1 32A	1
32 A	1 phase	Type 2	CEE 32A/5p	110691	Ex9EVC1 T2 32A	1
16 A	3 phase	Type 2	CEE 16A/5p	110692	Ex9EVC3 T2 16A	1
32 A	3 phase	Type 2	CEE 32A/5p	110693	Ex9EVC3 T2 32A	1

EV plug types

Type 1

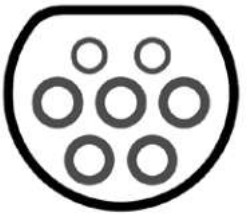

Type 2

Technical data p. 169

Technical Data

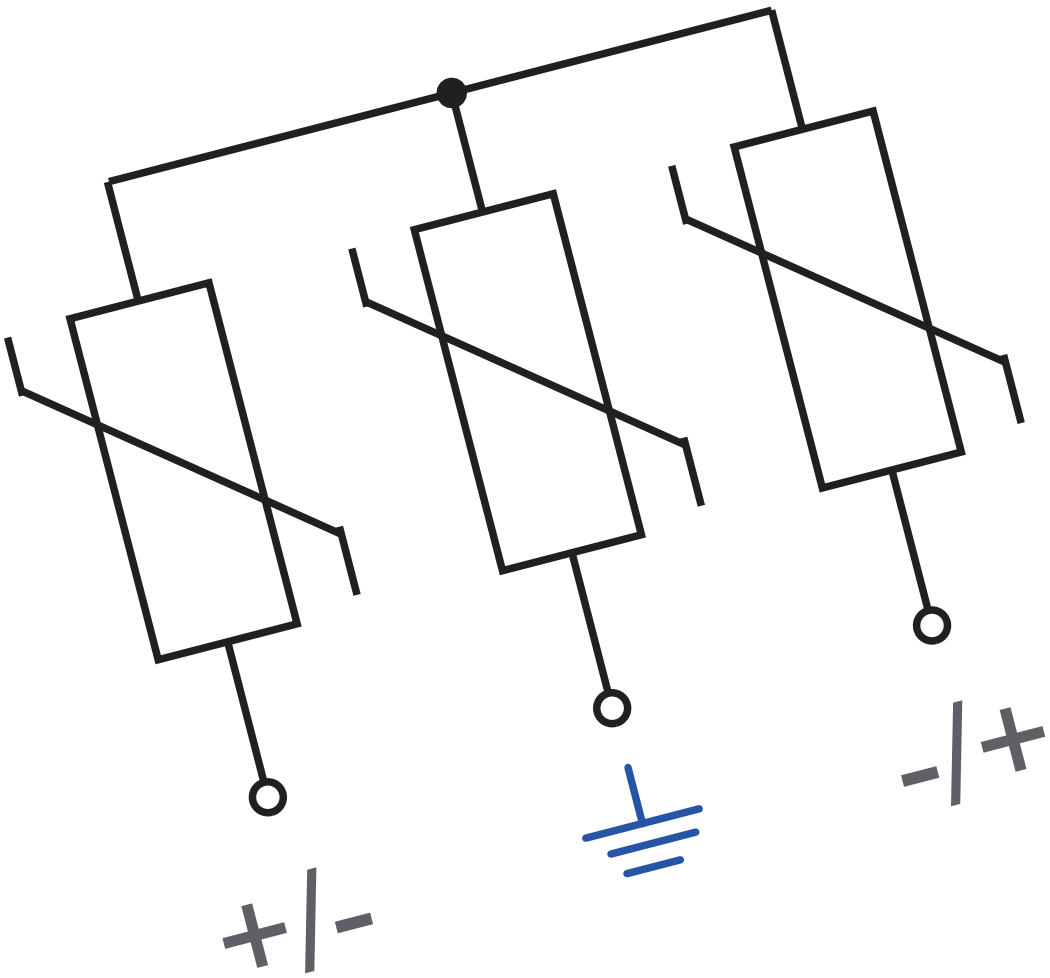

Content

Technical data

Technical Data Ex9BP up to 1000 V DC

DC Miniature Circuit Breakers up to 1000 V DC

General parameters

Non-polarized, suitable for general DC as well as Photovoltaic applications		
Accessories		
Auxiliary contacts	AX3111, AX3122	100540, 100542
Alarm contact	AL3111	100541
Auxiliary and alarm contact	AXL31	100543
Shunt trip releases	SHT31, SHT3111	100544-100546, 100547-100549
Undervoltage releases	UVT31, UVT3101, UVT3110	100550-100551, 100552-100553, 100554-100555
Max. number of installed accessories is 3 pcs of one contact units (AX3111, AL3111) or 2 pcs of two contact units (AX3122, AXL31) and 2 pcs of releases (SHT31, UVT31)		

Electrical parameters

Tested according to	IEC/EN 60947-2
Rated operating voltage U_e	500 (2P), 1000 (4P) V DC
Rated breaking capacity I_{cu}	6 kA
Rated current I_n	10 — 63 A
Tripping characteristics	C, K
Rated impulse withstand voltage U_{imp}	4 kV (2P), 6 kV (4P)
Rated insulation voltage U_i	1 000 V DC
Electrical service life	300 operation cycles
Line voltage connection	arbitrary above or below

Mechanical parameters

Device width	18 mm (per pole/module)
Device height	83 mm (89 mm including rail clip)
Frame size	45 mm
Mounting	easy fastening onto 35 mm device rail (DIN)
Degree of protection	IP20 terminals
Terminals	combined lift + open mouthed
Terminal capacity	1 — 35 mm^2
Fastening torque of terminals	3.5 Nm
Busbar thiskness	0.8 — 2 mm
Mechanical service life	20 000 operation cycles
Ambient temperature	-35 — +70 °C
Altitude	≤ 2 000 m
Relative humidity	≤ 95 % at 20ºC, ≤ 50 % at 40ºC
Resistance to humidity and heat	class 2
Pollution degree	3
Installation class	III
Weight	0.12 kg (per pole/module)

Ordering information p. 31

Technical Data Ex9BP up to 1000 V DC

DC Miniature Circuit Breakers up to 1000 V DC

Dimensions

2P

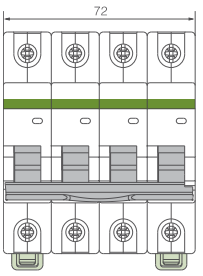

4P

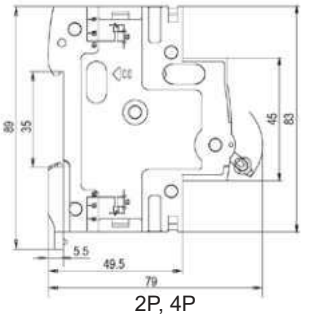

2P, 4P

Wiring diagrams

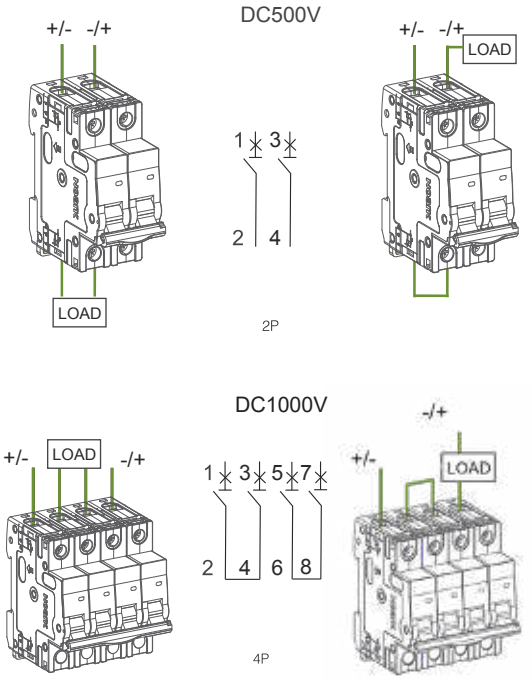

Tripping characteristics

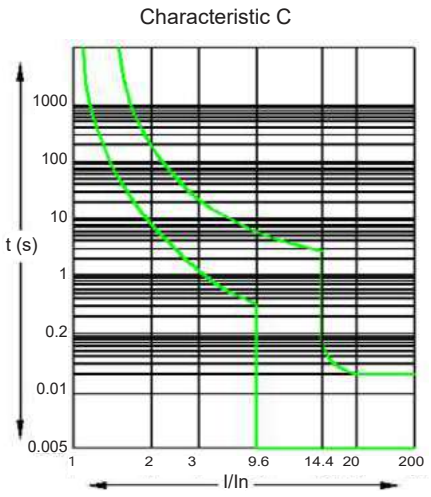

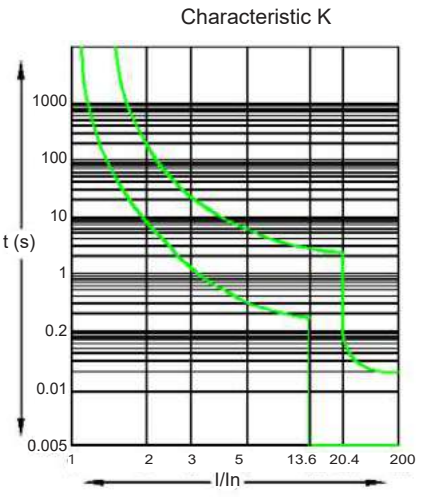

Ordering information p. 31

Technical Data Ex9BP up to 1000 V DC

DC Miniature Circuit Breakers up to 1000 V DC

Dependence of tripping characteristics on ambient temperature

T [°C]	I_n (T) [A]								
	10 A	13 A	16 A	20 A	25 A	32 A	40 A	50 A	63 A
-20	13.5	16:3	20.0	24.5	29.8	39.5	50.5	60.0	77.5
-15	13.3	15.9	19.8	24.3	29.7	39.3	50.4	59.8	76.3
-10	13.0	15.7	19.5	24.0	29.5	39.0	50.2	59.5	75.0
-5	12.7	15.4	19.2	23.8	29.3	38.8	50.0	59.2	73.0
0	12.5	15	19.1	23.7	29.2	38.6	48.8	59.0	71.8
5	12.3	14.7	18.8	23.5	29.0	38.4	48.6	58.8	70.6
10	12.1	14.3	18.6	23.3	28.8	38.2	48.4	56.5	69.0
15	12.0	14	18.5	23.1	28.6	38.0	48.1	55.0	67.5
20	11.8	13.7	18.3	22.8	28.4	37.8	47.8	54.5	66.2
25	11.5	13.4	18.0	22.6	28.2	37.5	47.0	52.5	64.5
30	10	13	16	20	25	32	40	50	63
35	9.9	12.8	15.7	19.7	24.6	31.5	39.2	48.8	61.5
40	9.8	12.5	15.4	19.3	24.3	31.1	38.8	47.0	58.7
45	9.8	12.2	15.1	18.8	24.0	30.8	38.3	45.5	55.8
50	9.6	12	14.9	18.5	23.8	30.1	38.0	44.0	53.5
55	9.5	11.7	14.7	18.2	23.5	29.5	36.5	42.5	51.7
60	9.0	11.5	14.5	17.8	23.0	28.5	35.0	41.5	49.2
65	8.6	11.2	14.0	17.5	22.0	27.5	34.0	40.5	47.9
70	8.0	11	13.8	17.3	21.5	27.0	32.5	38.0	46.8

Power loss per pole

I_n [A]	10 A	13 A	16 A	20 A	25 A	32 A	40 A	50 A	63 A
P [W]	1.8	3.1	3.1	3.1	3.9	3.9	4.7	4.7	6.2

Ordering information p. 31

Technical Data Ex9MV2S

DC Moulded Case Circuit Breakers for photovoltaic

General parameters

Suitable for photovoltaics application		
Internal accessories		
Left auxiliary contact unit	AX22V	110199
	2AX22V	110200
Right auxiliary contact unit	AX22VR	110206
	2AX22VR	110207
Left alarm contact unit	AL22V	110201
Left auxiliary + alarm contact unit	AX+AL22V	110202
Right shunt trip releases	SHT22VR	110208-110210
External accessories		
Extended rotary handle	ERH-1	110211
Mounting screws as well as phase barriers in the scope of delivery		

Accesories position

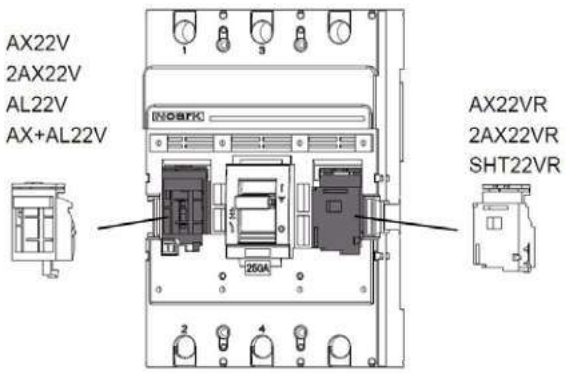

Electrical parameters

Tested according to	IEC/EN 60947-2			
Rated op. voltage U_e	1500 V DC			
Rated insulation voltage U_i	1500 V			
Rated impulse withstand voltage U_{imp}	12 kV			
Rated ultimate short-circuit breaking capacity I_{cu}	15 kA			
Rated service short-circuit breaking capacity I_{cs}	15 kA			
Rated current	125 A, 160 A, 200 A, 225 A, 250 A			
Utilization category	A			
Electrical service life	2 000 operation cycles			
Maximum frequency of switch. cycles	120 cycles per hour			
Total disconnection time at short circuit	< 40 ms			
Power loss per pole	max 32 W			
Altitude	2000 m	3000 m	4000 m	5000 m
Rated operational current I_n	1x I_n	0.97x I_n	0.93x I_n	0.89x I_n
Rated operational voltage U_e	1500 V DC	1350 V DC	1200 V DC	1050 V DC
Rated insulation voltage U_i	1500 V	1500 V	1500 V	1500 V
Dielectric properties	3110 V DC	2890 V DC	2700 V DC	2500 V DC

Ordering information p. 36

Technical Data Ex9MV2S

DC Moulded Case Circuit Breakers for photovoltaic

Mechanical parameters

Device width	135 mm
Device height	200 mm
Device depth	103 mm
Mounting	onto panel
Degree of protection	IP20
Mechanical service life	10 000 operation cycles
Terminals	M10 screws
Busbar thickness	≤ 4 mm
Busbar width	≤ 29 mm
Cable lug width	≤ 50 mm
Fastening torque of terminals	25 Nm
Ambient temperature	-40 — +70 °C
Relative humidity	≤ 50 % at 40 ºC, ≤ 90 % at 20 ºC
Pollution degree	3
Weight	3.3 kg
Mounting position	vertical, can be rotated by 90° in each axis

Wiring diagram

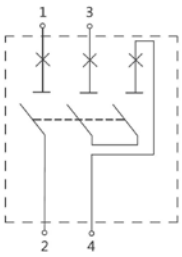

Dimensions

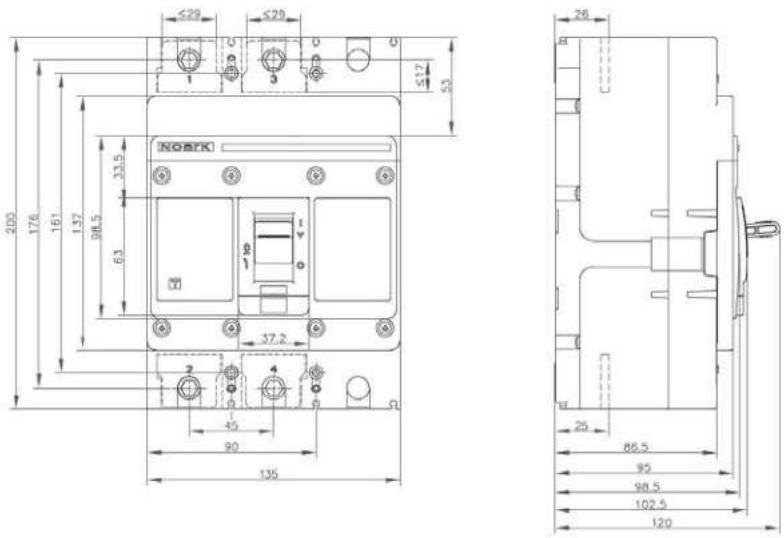

mm

Ordering information p. 36

Technical Data Ex9MV2S

DC Moulded Case Circuit Breakers for photovoltaic

Installation space

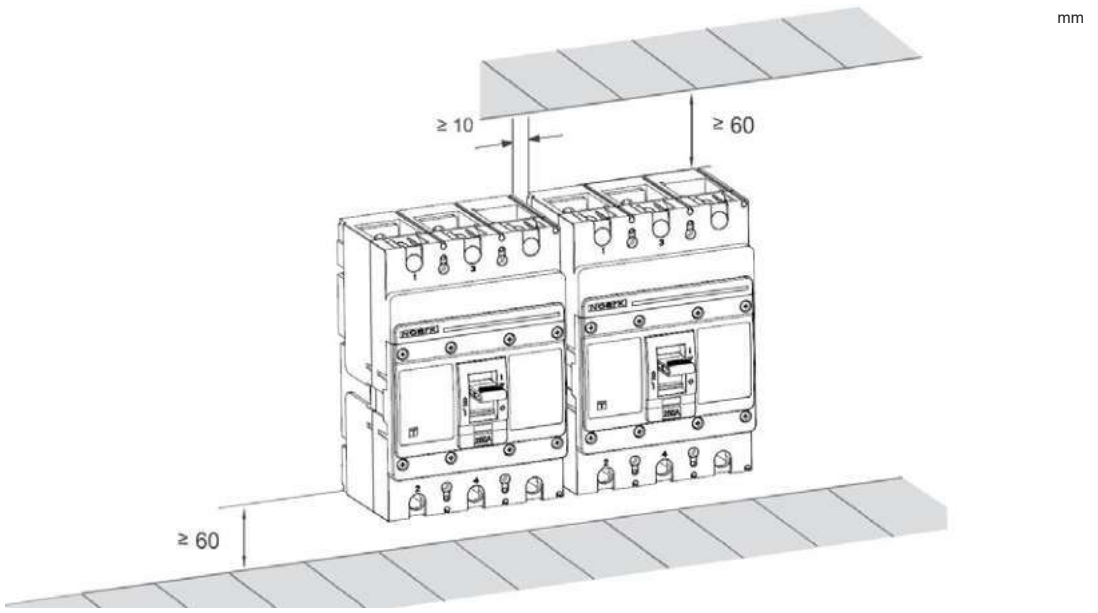

Tripping characteristics

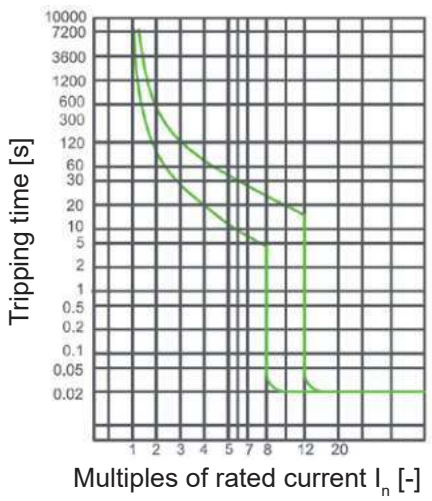

Temperature derrating curve

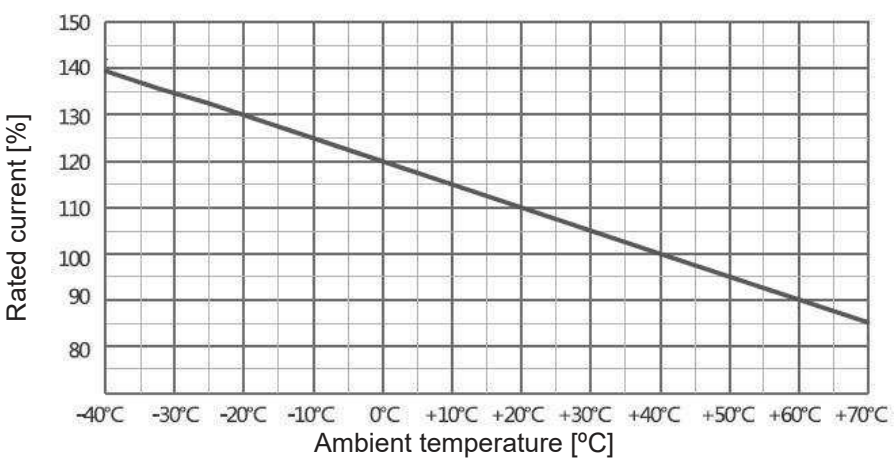

Ordering information p. 36

Technical Data Ex9MV2S Accessories

Accessories for Moulded Case Circuit Breakers Ex9MV2S

Auxiliary and signal contact units AX22V, AL22V and combinations

General parameters

Contact units for auxiliary and signal contact functions are suitable for all MCCB frame sizes
Auxiliary contacts synchronous with main contacts of the circuit breaker
Signal contacts active on electrical tripping of the circuit breaker (tripping signal contacts)
With connection wires

Electrical parameters

	AX22V	2AX22V	AL22V	AX+AL22V	AX22VR	2AX22VR
Contacts	1 changeo-ver (CO)	2 changeo-ver (CO)	1 changeo-ver (CO)	2 changeo-ver (CO)	1 changeo-ver (CO)	2 changeo-ver (CO)
Contact function	auxiliary left	auxiliary left	signal left	auxiliary + signal left	auxiliary right	auxiliary right
Maximum op. voltage U	AC400V/DC220V					
Rated frequency	50/60 Hz					
Rated op. current I_e AC	1.5A					
Rated op. current I_e DC	0.15A					
Rated thermal current I_{th}	3 A					
Rated op. current I_e, ut. cat. AC-15	5 A (240 V), 2 A (415 V)					
Rated op. current I_e, ut. cat. DC-13	1 A (110 V), 0.25 A (220 V)					
Rated insulation voltage U_i	400 V					

Mechanical parameters

	AX22V	2AX22V	AL22V	AX+AL22V	AX22VR	2AX22VR
Suitable for	Ex9MV2S					
Connection	Equipped with connection wires					

Wiring diagrams

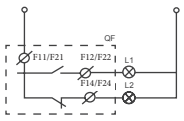

2AX22V
2AX22VR

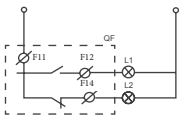

AX22V
AX22VR
AX+AL22V

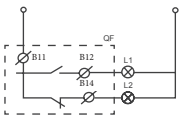

AL22V
AX+AL22V

Ordering information p. 38

Technical Data Ex9MV2S Accessories

Accessories for Moulded Case Circuit Breakers Ex9MV2S

Shunt trip releases SHT22VR

General parameters

It is possible to use one unit of shunt trip release SHT22VR on the right side of the MCCB
Can be used for remote switch off
With connection wires

Electrical parameters

	SHT22VR
Rated operating voltage U_e (according to type)	24 V DC 230 V AC 400 V AC
Rated frequency	50/60 Hz
Rated insulation voltage U_i	400 V
Tripping time	≤ 500 ms

Mechanical parameters

	SHT22VR
Suitable for	Ex9MV2S
Connection	Equipped with connection wires

Wiring diagrams

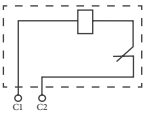

SHT22VR

Ordering information p. 38

Technical Data Ex9MV2S Accessories

Accessories for Moulded Case Circuit Breakers Ex9MV2S

Extended rotary handles ERH-1

General parameters

Rotary handle with extension shaft
Scope of delivery: mechanism block, extension shaft, rotary handle
Can be locked in ON and OFF position with padlocks (not in the scope of delivery)
Extension shaft can be shortened

Electrical parameters

	ERH-1
Degree of protection	IP20

Mechanical parameters

	ERH-1
Suitable for	Ex9MV2S
Length of the extension shaft	300 mm (min 50 mm if shorted)
Indication	Connected breaker status ON-OFF-TRIP
Mounting	Directly onto breaker
Toggle colour	Black

Dimensions

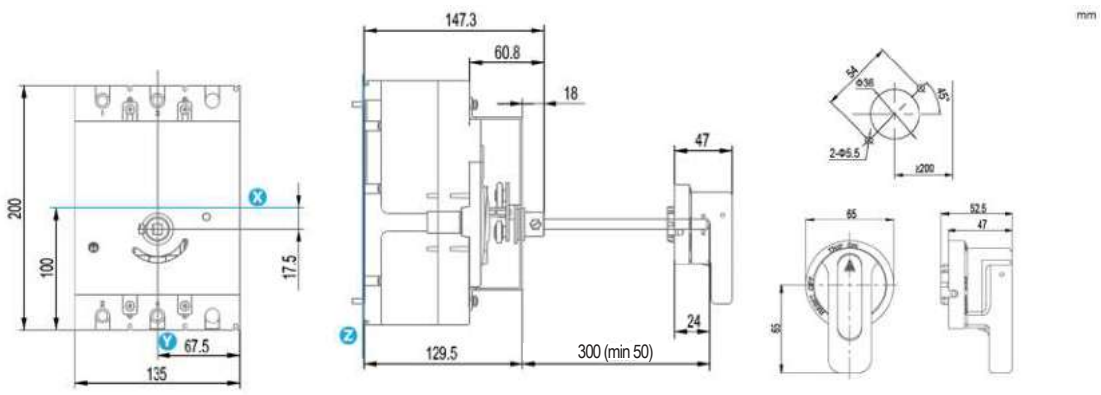

Ordering information p. 38

Technical Data Ex9M1 DC TM

DC TM Moulded Case Circuit Breakers up to 160 A

General parameters

Suitable for commercial as well as industrial applications		
I_r can be set in range (0.7 — 1.0) × I_n		
I_i can be set in range (5 — 10) × I_n for 125 A and 160 A types, otherwise is fixed at 10 × I_n		
I_{IN} fixed at 10 × I_n		
Internal accessories		
Auxiliary contact unit	AX21M	112071
Alarm contact unit	AL21M	112072
Shunt trip releases	SHT21	101397 — 101405
Undervoltage releases	UVT21	101406 — 101407
Max. number of installed internal accessories is 2 pcs of AX21M, 1 pc of AL21M and 1 pc of a release (SHT21 or UVT21)		
External accessories		
Direct rotary handle	RHD21	101410
Extended rotary handle	ERH21	101409
Remote motor operators	MOD21	101411 — 101415
Terminal cover, short	TCV21 3P, 4P	101439, 102372
Terminal cover, long	TCE21 3P, 4P	101440, 102373
Phase barrier	PHS21	112110
Connection terminals	MC21	103705 — 103708
DIN-rail adapter	DRA21	106319
Plug-in base	PIA 21	112875, 112876, 112881, 112882
Mounting screws, screw type terminals as well as phase barriers in the scope of delivery		

Derating coefficient of Tripping Characteristics on accessories combination

Combined accessory	I_n (T) [A]					
	16 — 50 A	63 A	80 A	100 A	125 A	160
PIA 21	1	1	1	1	0.95	0.95

Ordering information p. 43

Technical Data Ex9M1 DC TM

DC TM Moulded Case Circuit Breakers up to 160 A

Electrical parameters

	Ex9M1B	Ex9M1S	Ex9M1N	Ex9M1Q	Ex9M1H
Tested according to	IEC/EN 60947-2				
Rated op. voltage U_e	750 / 1000 V DC				
Rated insulation voltage U_i	1 000 V				
Rated impulse withstand voltage U_{imp}	8 kV				
Rated frequency	DC				
Rated ultimate short-circuit breaking capacity I_{cu}	25 kA / 1000V	36 kA / 1000V	50 kA / 1000V	70 kA / 1000V	100 kA / 1000V
Rated service short-circuit breaking capacity I_{cs}	25 kA / 1000V	36 kA / 1000V	50 kA / 1000V	70 kA / 1000V	100 kA / 1000V
Rated current	16 / 20 / 25 / 32 / 40 / 50 / 63 / 80 / 100 / 125 / 160 A				
Utilization category	A				
Mechanical service life	15 000 operation cycles				
Electrical service life	2 000 operation cycles / 1000 V				
Total disconnection time at short circuit	< 2 ms				
Line voltage connection	arbitrary above or below				

Dependence of Tripping Characteristics on Ambient Temperature

T [°C]	I_n (T) [A]										
	16 A	20 A	25 A	32 A	40 A	50 A	63 A	80 A	100 A	125 A	160 A
-40	22.5	28	35	45	56	70	88	112	140	175	224
-35	22	27.5	34	44	55	68.5	86.5	110	137	172	220
-25	20.5	26.5	33	42	53	66	83	106	132	165	212
-15	20	25.5	32	41	51	64	80	102	127	159	204
-5	19.5	24.5	30.5	39	49	61	77	98	122	153	196
0	19	24	30	38	48	60	75	96	120	150	192
10	18.5	23	28	37	46	57.5	72	92	115	144	184
20	17.5	22	27	35	44	55	69	88	110	137	176
30	17	21	26	33	42	52.5	66	84	105	131	168
40	16	20	25	32	40	50	63	80	100	125	160
50	15	19.5	24	30.5	37	47.5	58.5	74.5	93	116	149
60	14.5	18.5	22.5	29	33.5	45	53	67	84	105	135
70	14	18	22	28	29	40	46	56	80	91	117

Power dissipation characteristics

I_n	16 A	20 A	25 A	32 A	40 A	50 A	63 A	80 A	100 A	125 A	160 A
Pole resistance (mΩ)	8.8	8.8	5.2	4.5	2.6	1.8	1.7	1.3	0.88	0.8	0.8
Pole power dissipation (W)	2.3	3.5	3.3	4.6	4.2	4.5	6.7	8.3	8.8	12.5	20.5

Ordering information p. 43

Technical Data Ex9M1 DC TM

DC TM Moulded Case Circuit Breakers up to 160 A

Mechanical parameters

Device width 3P / 4P	90 mm / 120 mm
Device height	140 mm
Device depth	81.6 mm
Mounting	onto panel
Degree of protection	IP40, IP20 terminals
Terminals	box
Terminal capacity	4 — 95 mm²
Fastening torque of terminals	8 Nm
Ambient temperature	-40 — +70 °C
Relative humidity	≤ 50 % at 40 °C, ≤ 90 % monthly average
Pollution degree	3
Weight 3P / 4P	1.2 kg / 1.7 kg
Mounting position	vertical, can be rotated by 90° in each axis

Derating coefficient of technical parameters based on altitude

Altitude	**≤ 2 000 m**	**3 000 m**	**4 000 m**	**5 000 m**
Derrating op. current I_n coefficient	1	0.96	0.93	0.9
Maximum rated op. voltage U_e	1 000 V DC	900 V DC	850 V DC	800 V DC
Rated insulation voltage U_i	1 000 V DC	930 V DC	870 V DC	800 V DC
Rated impulse withstand voltage U_{imp}	8 kV	8 kV	8 kV	8 kV
Dielectric properties (U_{imp}=8 kV)	3 110 V DC	2 892 V DC	2 705 V DC	2 488 V DC

Dimensions

3P 4P mm

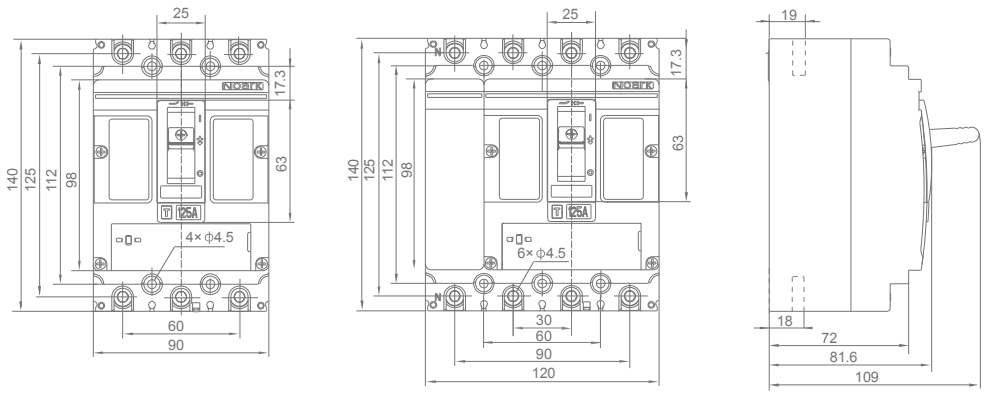

Wiring diagram

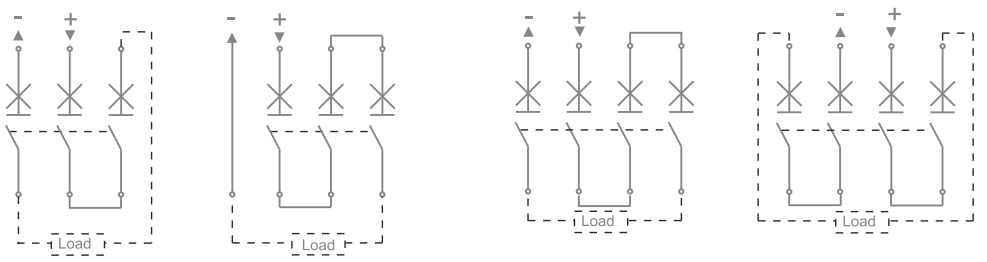

3P / 750 V DC 4P / 1 000 V DC

Ordering information p. 43

Technical Data Ex9M1 DC TM

DC TM Moulded Case Circuit Breakers up to 160 A

Installation space

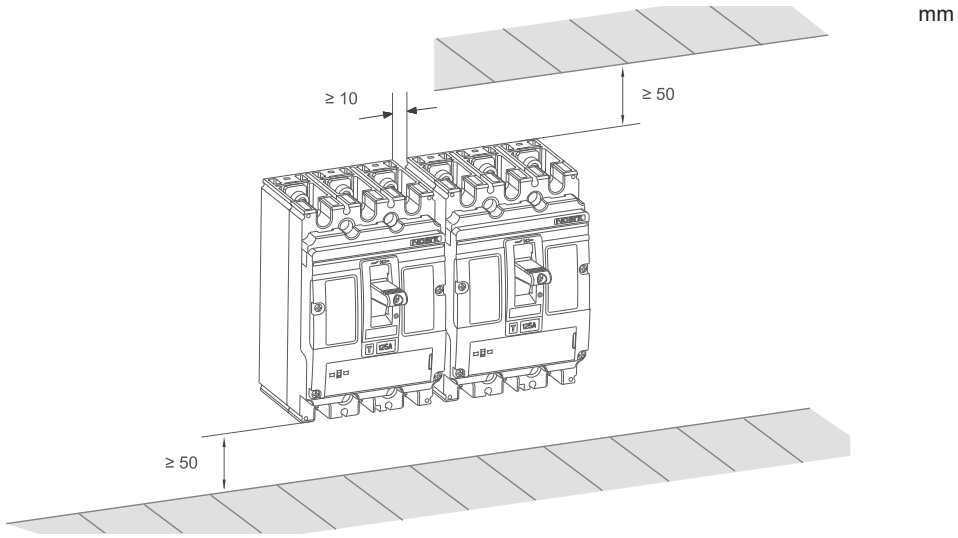

Tripping characteristics

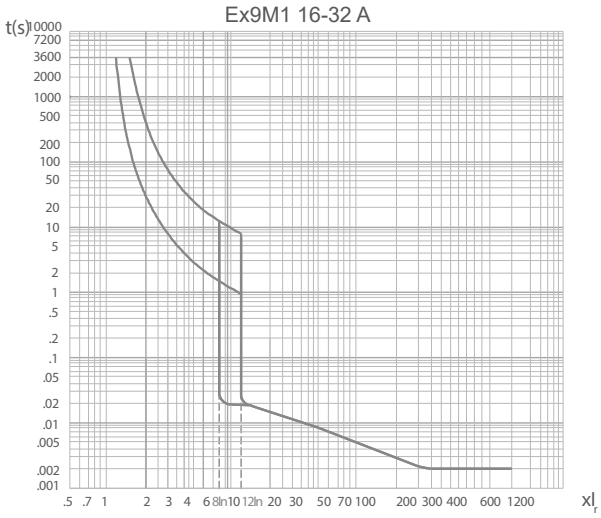

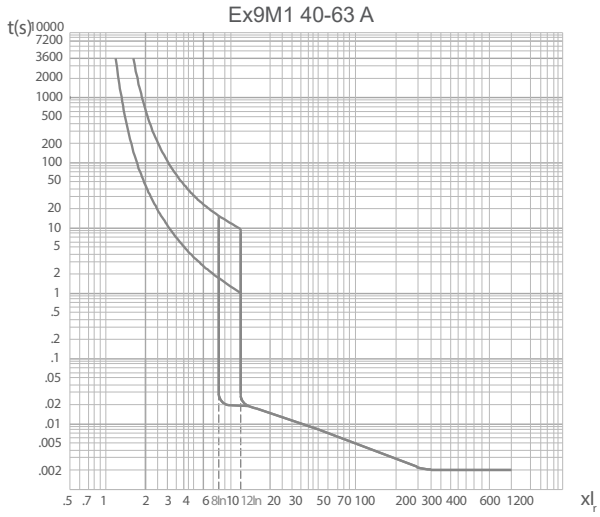

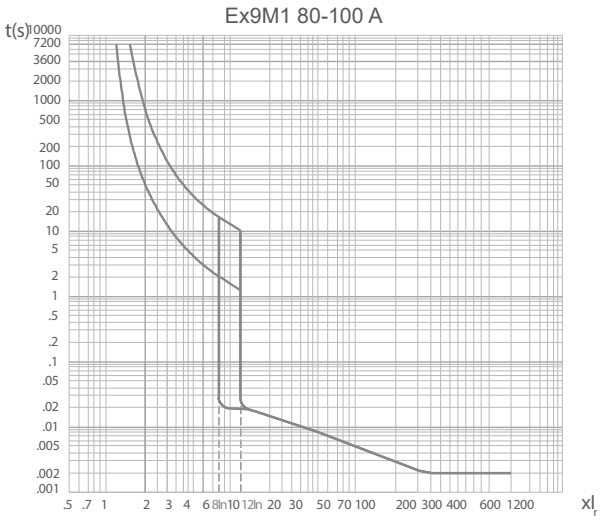

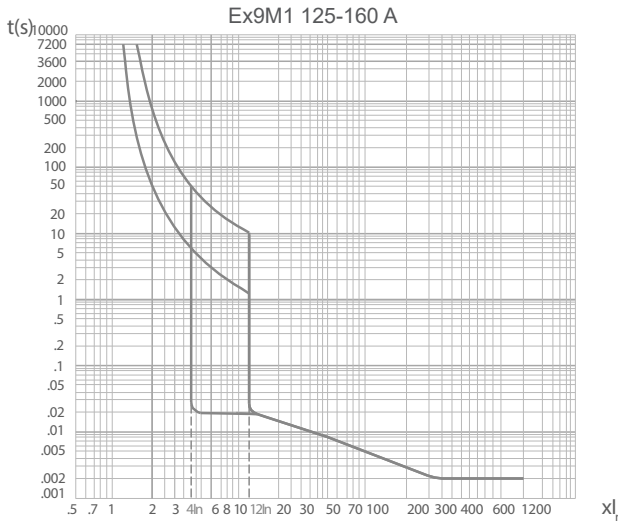

Ordering information p. 43

Technical Data Ex9M2 DC TM

DC TM Moulded Case Circuit Breakers up to 250 A

General parameters

Suitable for commercial as well as industrial applications		
I_r can be set in range (0.7 — 1.0) × I_n		
I_i can be set in range (7 — 12) × I_n for 125 A and (5 — 10) × I_n for other devices up to 250 A		
$I_{IN} = I_i$		
Internal accessories		
Auxiliary contact unit	AX21M	112071
Alarm contact unit	AL21M	112072
Shunt trip releases	SHT22	101416 — 101424
Undervoltage releases	UVT22	101425 — 101426
Max. number of installed internal accessories is 2 pcs of AX21M, 1 pc of AL21M and 1 pc of a release (SHT22 or UVT22)		
External accessories		
Direct rotary handle	RHD22	101429
Extended rotary handle	ERH22	101428
Remote motor operators	MOD22	101430 — 101434
Terminal cover, short	TCV22 3P, 4P	101442, 102374
Terminal cover, long	TCE22 3P, 4P	101443, 102375
Phase barrier	PHS22	112111
Connection terminals	MC22	103709, 103869, 103711, 103713
DIN-rail adapter	DRA22	106320
Plug-in base	PIA 22	112877, 112878, 112883, 112884
Mounting screws, screw type terminals as well as phase barriers in the scope of delivery		

Derating coefficient of Tripping Characteristics on accessories combination

Combined accessory	I_n (T) [A]					
	125 A	160 A	180 A	200 A	225 A	250 A
PIA 22	1	1	1	0.95	0.95	0.95

Ordering information p. 46

Technical Data Ex9M2 DC TM

DC TM Moulded Case Circuit Breakers up to 250 A

Electrical parameters

	Ex9M2B	Ex9M2S	Ex9M2N	Ex9M2Q	Ex9M2H
Tested according to	IEC/EN 60947-2				
Rated op. voltage U_e	750 / 1000 V DC				
Rated insulation voltage U_i	1 000 V				
Rated impulse withstand voltage U_{imp}	8 kV				
Rated frequency	DC				
Rated ultimate short-circuit breaking capacity I_{cu}	25 kA / 1000V	36 kA / 1000V	50 kA / 1000V	70 kA / 1000V	100 kA / 1000V
Rated service short-circuit breaking capacity I_{cs}	25 kA / 1000V	36 kA / 1000V	50 kA / 1000V	70 kA / 1000V	100 kA / 1000V
Rated current	125 / 160 / 180 / 200 / 225 / 250 A				
Utilization category	A				
Mechanical service life	15 000 operation cycles				
Electrical service life	1 500 operation cycles / 1000 V				
Total disconnection time at short circuit	< 2 ms				
Line voltage connection	arbitrary above or below				

Dependence of Tripping Characteristics on Ambient Temperature

T [°C]	I_n (T) [A]					
	125 A	160 A	180 A	200 A	225 A	250 A
-40	175	224	252	280	315	35
-35	172	220	247	275	309	343
-25	165	212	238	265	300	332
-15	159	204	229	255	288	319
-5	153	196	220	245	276	306
0	150	192	212	240	270	300
10	144	184	207	230	259	287
20	137	176	198	220	247	275
30	131	168	189	210	236	262
40	125	160	180	200	225	250
50	118	152	171	190	213	237
60	106	136	157	175	196	218
70	96	120	144	166	180	207

Power dissipation characteristics

I_n	125 A	160 A	180 A	200 A	225 A	250 A
Pole resistance (mΩ)	0.7	0.55	0.55	0.55	0.4	0.4
Pole power dissipation (W)	10.9	14.1	17.8	22	20.3	25

Ordering information p. 46

Technical Data Ex9M2 DC TM

DC TM Moulded Case Circuit Breakers up to 250 A

Mechanical parameters

Device width 3P / 4P	105 mm / 140 mm
Device height	157 mm
Device depth	96.5 mm
Mounting	onto panel
Degree of protection	IP40, IP20 terminals
Terminals	box
Terminal capacity	10 — 120 mm^2
Fastening torque of terminals	25 Nm
Ambient temperature	-40 — +70 °C
Relative humidity	≤ 50 % at 40 °C, ≤ 90 % monthly average
Pollution degree	3
Weight 3P / 4P	1.85 kg / 2.5 kg
Mounting position	vertical, can be rotated by 90° in each axis

Derating coefficient of technical parameters based on altitude

Altitude	**≤ 2 000 m**	**3 000 m**	**4 000 m**	**5 000 m**
Derrating op. current I_n coefficient	1	0.96	0.93	0.9
Maximum rated op. voltage U_e	1 000 V DC	900 V DC	850 V DC	800 V DC
Rated insulation voltage U_i	1 000 V DC	930 V DC	870 V DC	800 V DC
Rated impulse withstand voltage U_{imp}	8 kV	8 kV	8 kV	8 kV
Dielectric properties (U_{imp}=8 kV)	3 110 V DC	2 892 V DC	2 705 V DC	2 488 V DC

Dimensions

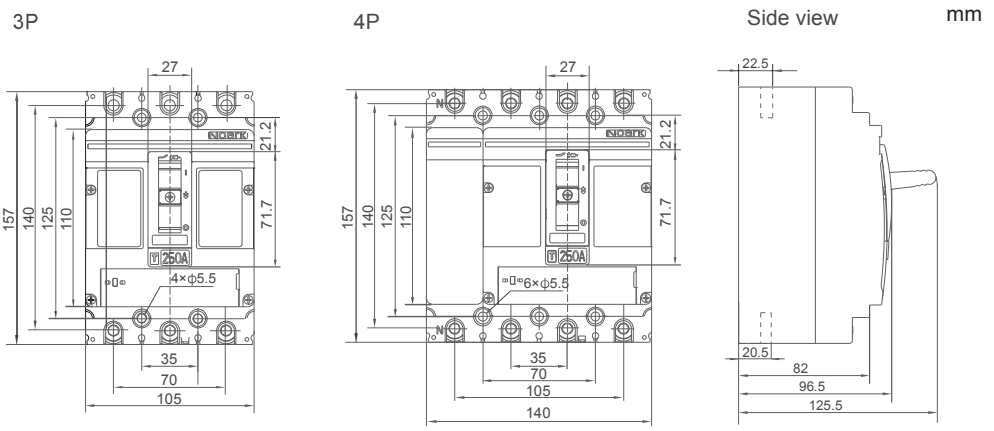

Wiring diagram

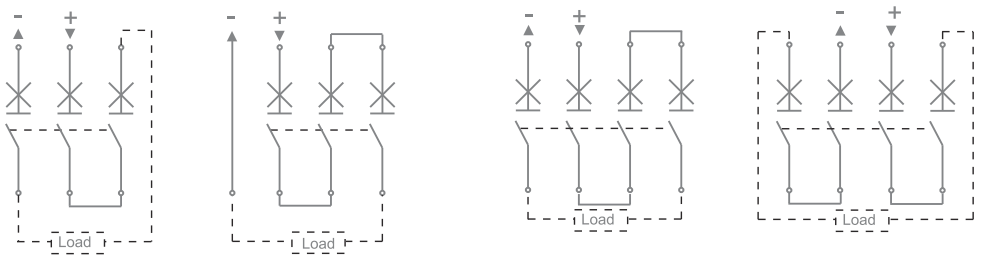

3P / 750 V DC

4P / 1 000 V DC

Ordering information p. 46

Technical Data Ex9M2 DC TM

DC TM Moulded Case Circuit Breakers up to 250 A

Installation space

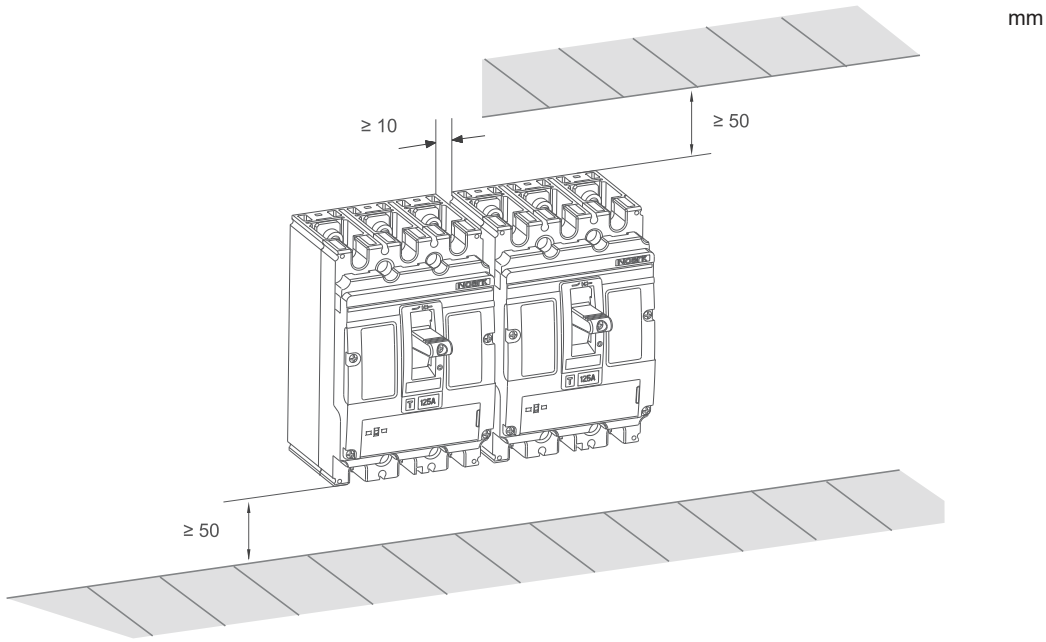

Tripping characteristics

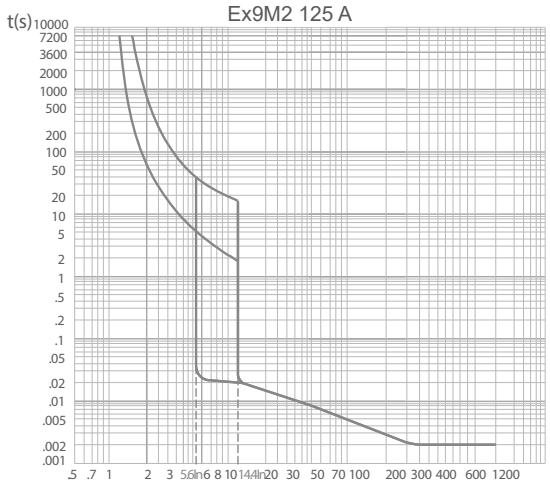

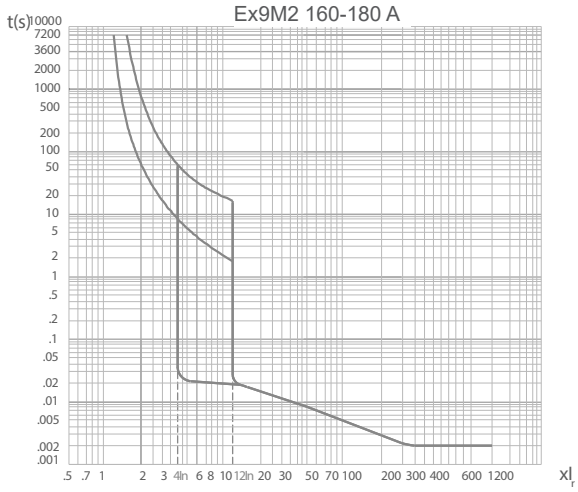

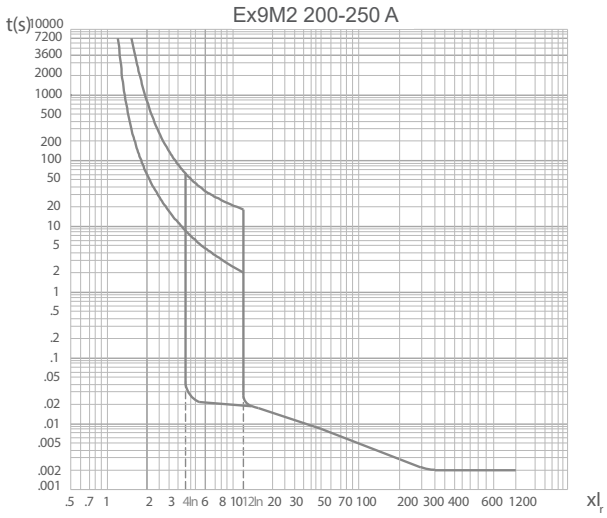

Ordering information p. 46

Technical Data Ex9M3 DC TM

DC TM Moulded Case Circuit Breakers up to 400 A

General parameters

Suitable for commercial as well as industrial applications		
I_r can be set in range (0.7 — 1.0) × I_n		
I_i can be set in range (5 — 10) × I_n		
$I_{iN} = I_i$		
Internal accessories		
Auxiliary contact unit	AX21M	112071
Alarm contact unit	AL21M	112072
Shunt trip releases	SHT22	101416 — 101424
Undervoltage releases	UVT22	101425 — 101426
Max. number of installed internal accessories is 2 pcs of AX21M, 1 pc of AL21M and 1 pc of a release (SHT22 or UVT22)		
External accessories		
Direct rotary handle	RHD23	101483
Extended rotary handle	ERH23	101482
Remote motor operators	MOD23	101484 — 101488
Terminal cover, short	TCV23 3P, 4P	101489, 102376
Terminal cover, long	TCE23 3P, 4P	101490, 102377
Phase barrier	PHS23	112112
Connection terminals	MC23	103715 — 103722
Mounting screws, screw type terminals as well as phase barriers in the scope of delivery		

Ordering information p. 49

Technical Data Ex9M3 DC TM

DC TM Moulded Case Circuit Breakers up to 400 A

Electrical parameters

	Ex9M3B	Ex9M3S	Ex9M3N	Ex9M3Q	Ex9M3H
Tested according to	IEC/EN 60947-2				
Rated op. voltage U_e	750 / 1000 V DC				
Rated insulation voltage U_i	1 000 V				
Rated impulse withstand voltage U_{imp}	12 kV				
Rated frequency	DC				
Rated ultimate short-circuit breaking capacity I_{cu}	25 kA / 1000V	36 kA / 1000V	50 kA / 1000V	70 kA / 1000V	100 kA / 1000V
Rated service short-circuit breaking capacity I_{cs}	25 kA / 1000V	36 kA / 1000V	50 kA / 1000V	70 kA / 1000V	100 kA / 1000V
Rated current	250 / 315 / 350 / 400 A				
Utilization category	A				
Mechanical service life	15 000 operation cycles				
Electrical service life	1 500 operation cycles / 1000 V				
Total disconnection time at short circuit	< 2 ms				
Line voltage connection	arbitrary above or below				

Dependence of Tripping Characteristics on Ambient Temperature

T [°C]	I_n (T) [A]			
	250 A	315 A	350 A	400 A
-40	350	441	490	560
-35	343	433	481	550
-25	332	418	465	530
-15	319	402	447	510
-5	306	386	429	490
0	300	378	420	480
10	287	362	402	460
20	275	346	385	440
30	262	331	367	420
40	250	315	350	400
50	237	300	332	380
60	225	286	295	360
70	212	271	276	320

Power dissipation characteristics

I_n	250 A	315 A	350 A	400 A
Pole resistance (mΩ)	0.35	0.25	0.25	0.15
Pole power dissipation (W)	21.9	24.8	30.6	24

Ordering information p. 49

Technical Data Ex9M3 DC TM

DC TM Moulded Case Circuit Breakers up to 400 A

Mechanical parameters

Device width 3P / 4P	140 mm / 185 mm
Device height	255 mm
Device depth	118.5 mm
Mounting	onto panel
Degree of protection	IP40, IP20 terminals
Terminals	M10 screws
Busbar thickness	≤ 8 mm
Busbar width	≤ 30 mm
Cable lug width	≤ 30 mm
Fastening torque of terminals	25 Nm
Ambient temperature	-40 — +70 °C
Relative humidity	≤ 50 % at 40 °C, ≤ 90 % monthly average
Pollution degree	3
Weight 3P / 4P	5.2 kg / 6.7 kg
Mounting position	vertical, can be rotated by 90° in each axis

Derating coefficient of technical parameters based on altitude

Altitude	**≤ 2 000 m**	**3 000 m**	**4 000 m**	**5 000 m**
Derrating op. current I_n coefficient	1	0.96	0.93	0.9
Maximum rated op. voltage U_e	1 000 V DC	900 V DC	850 V DC	800 V DC
Rated insulation voltage U_i	1 000 V DC	930 V DC	870 V DC	800 V DC
Rated impulse withstand voltage U_{imp}	12 kV	10 kV	8 kV	8 kV
Dielectric properties (U_{imp}=12 kV)	3 600 V DC	3 350 V DC	3 110 V DC	2 985 V DC

Dimensions

mm

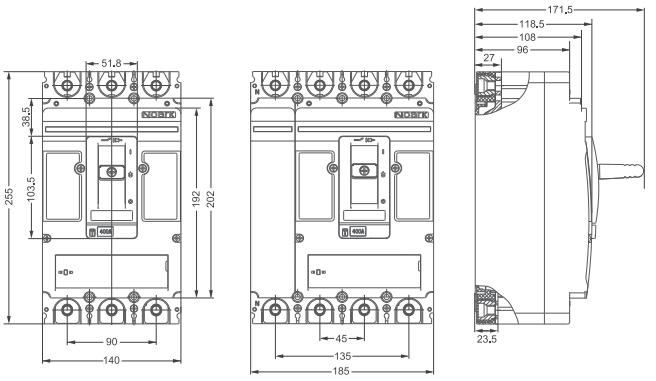

3P 4P

Wiring diagram

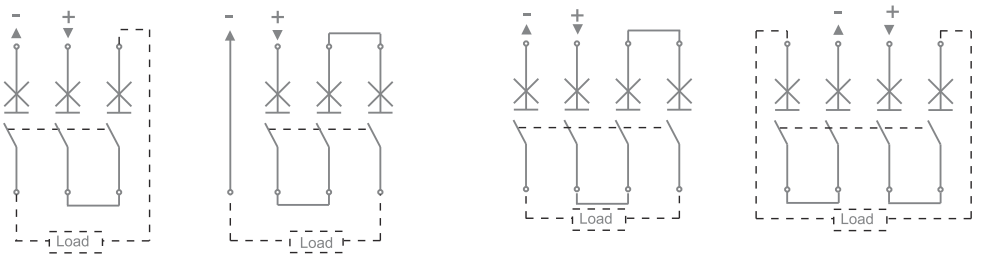

3P / 750 V DC 4P / 1 000 V DC

Ordering information p. 49

Technical Data Ex9M3 DC TM

DC TM Moulded Case Circuit Breakers up to 400 A

Installation space

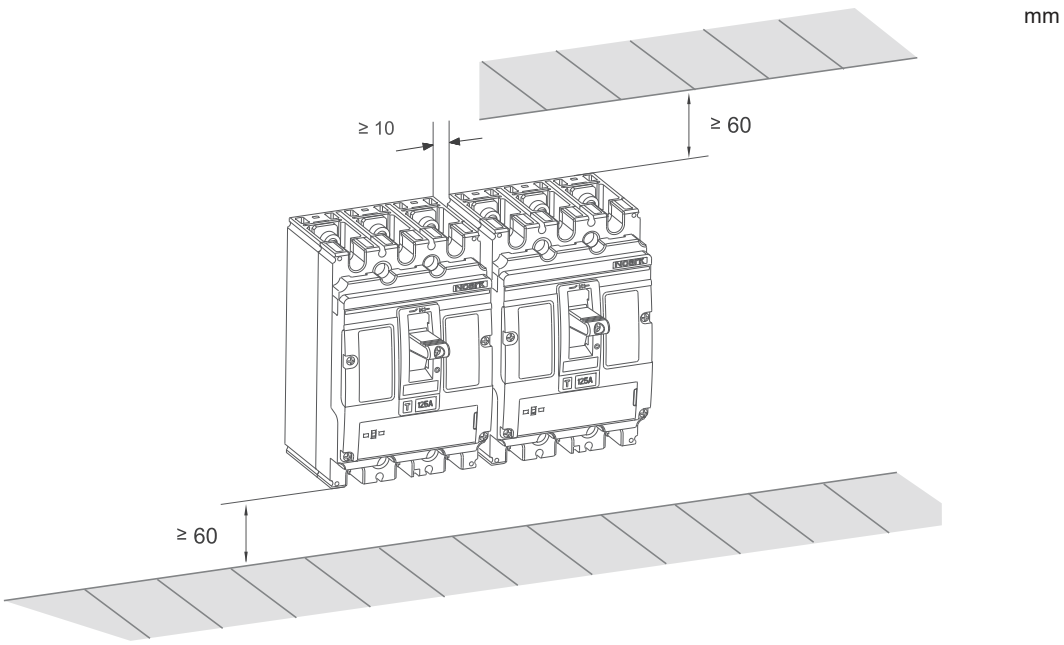

Tripping characteristics

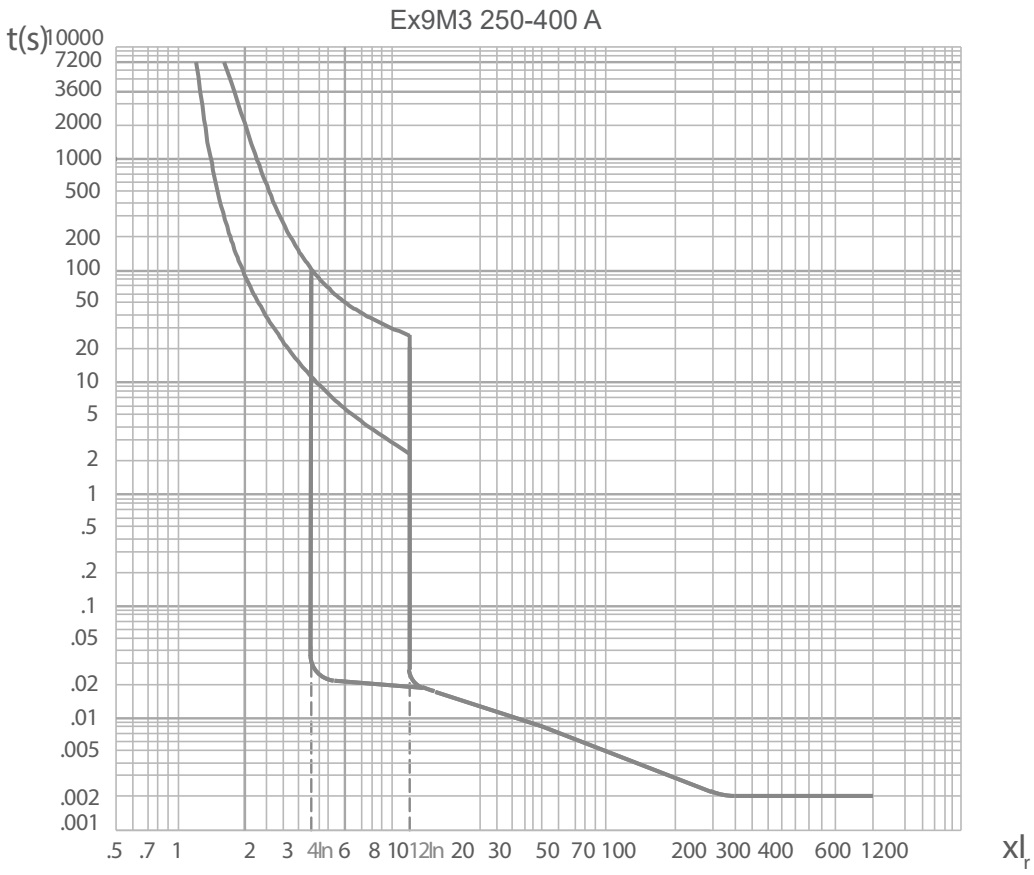

Ordering information p. 49

Technical Data Ex9M4 DC TM

DC TM Moulded Case Circuit Breakers up to 630 A

General parameters

Suitable for commercial as well as industrial applications		
I_r can be set in range (0.7 — 1.0) × I_n		
I_i can be set in range (5 — 10) × I_n		
$I_{iN} = I_i$		
Internal accessories		
Auxiliary contact unit	AX21M	112071
Alarm contact unit	AL21M	112072
Shunt trip releases	SHT24	103723 — 103730
Undervoltage releases	UVT24	103722 — 103740
Max. number of installed internal accessories is 2 pcs of AX21M, 1 pc of AL21M and 1 pc of a release (SHT24 or UVT24)		
External accessories		
Direct rotary handle	RHD24	103742
Extended rotary handle	ERH24	103741
Remote motor operators	MOD24	103743 — 103747
Terminal cover, short	TCV24 3P, 4P	103748, 103750
Terminal cover, long	TCE24 3P, 4P	103749, 104855
Phase barrier	PHS24	112113
Connection terminals	MC24 W2	106314
Mounting screws, screw type terminals as well as phase barriers in the scope of delivery		

Ordering information p. 51

Technical Data Ex9M4 DC TM

DC TM Moulded Case Circuit Breakers up to 630 A

Electrical parameters

	Ex9M4B	Ex9M4S	Ex9M4N	Ex9M4Q	Ex9M4H
Tested according to	IEC/EN 60947-2				
Rated op. voltage U_e	750 / 1000 V DC				
Rated insulation voltage U_i	1 000 V				
Rated impulse withstand voltage U_{imp}	12 kV				
Rated frequency	DC				
Rated ultimate short-circuit breaking capacity I_{cu}	25 kA / 1000V	36 kA / 1000V	50 kA / 1000V	70 kA / 1000V	100 kA / 1000V
Rated service short-circuit breaking capacity I_{cs}	25 kA / 1000V	36 kA / 1000V	50 kA / 1000V	70 kA / 1000V	100 kA / 1000V
Rated current	400 / 500 / 630 A				
Utilization category	A				
Mechanical service life	10 000 operation cycles				
Electrical service life	1 500 operation cycles / 690 V AC				
Total disconnection time at short circuit	< 2 ms				
Line voltage connection	arbitrary above or below				

Dependence of Tripping Characteristics on Ambient Temperature

T [°C]	I_n (T) [A]		
	400 A	**500 A**	**630 A**
-40	560	700	882
-35	550	687	866
-25	530	662	836
-15	510	637	804
-5	490	612	772
0	480	600	756
10	460	575	724
20	440	550	693
30	420	525	661
40	400	500	630
50	390	490	580
60	370	460	530
70	320	400	490

Power dissipation characteristics

I_n	400 A	500 A	630 A
Pole resistance (mΩ)	0.08	0.08	0.08
Pole power dissipation (W)	12.8	20	31.8

Ordering information p. 51

Technical Data Ex9M4 DC TM

DC TM Moulded Case Circuit Breakers up to 630 A

Mechanical parameters

Device width 3P / 4P	195 mm / 260 mm
Device height	300 mm
Device depth	142 mm
Mounting	onto panel
Degree of protection	IP40, IP20 terminals
Terminals	M12 screws
Busbar thickness	≤ 10 mm
Busbar width	≤ 50 mm
Cable lug width	≤ 50 mm
Fastening torque of terminals	30 Nm
Ambient temperature	-40 — +70 °C
Relative humidity	≤ 50 % at 40 °C, ≤ 90 % monthly average
Pollution degree	3
Weight 3P / 4P	10.5 kg / 13.5 kg
Mounting position	vertical, can be rotated by 90° in each axis

Derating coefficient of technical parameters based on altitude

Altitude	**≤ 2 000 m**	**3 000 m**	**4 000 m**	**5 000 m**
Derrating op. current I_n coefficient	1	0.96	0.93	0.9
Maximum rated op. voltage U_e	1 000 V DC	900 V DC	850 V DC	800 V DC
Rated insulation voltage U_i	1 000 V DC	930 V DC	870 V DC	800 V DC
Rated impulse withstand voltage U_{imp}	12 kV	10 kV	8 kV	8 kV
Dielectric properties (U_{imp}=12 kV)	3 600 V DC	3 350 V DC	3 110 V DC	2 985 V DC

Dimensions

mm

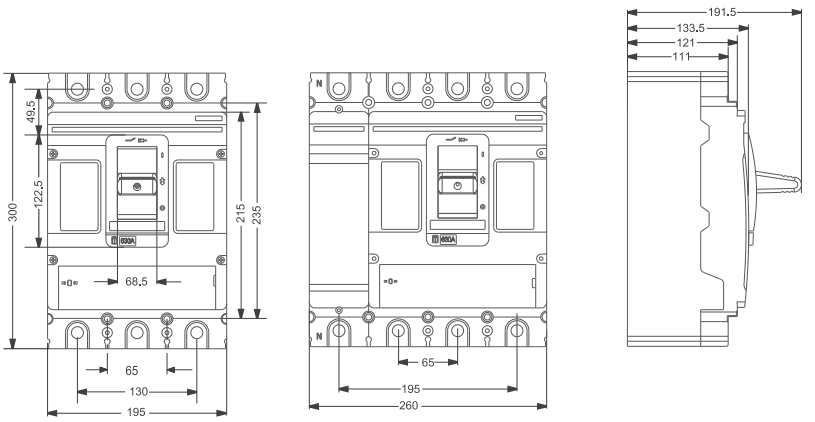

3P 4P

Wiring diagram

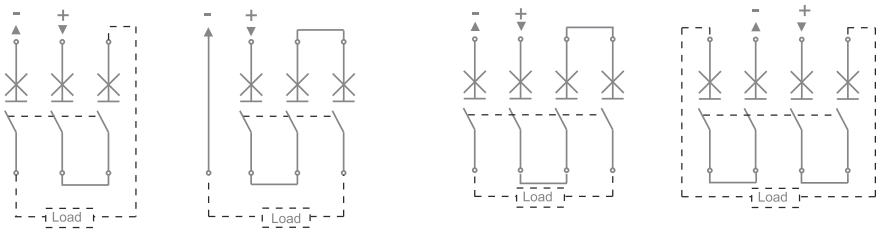

3P / 750 V DC 4P / 1 000 V DC

Ordering information p. 51

Technical Data Ex9M4 DC TM

DC TM Moulded Case Circuit Breakers up to 630 A

Installation space

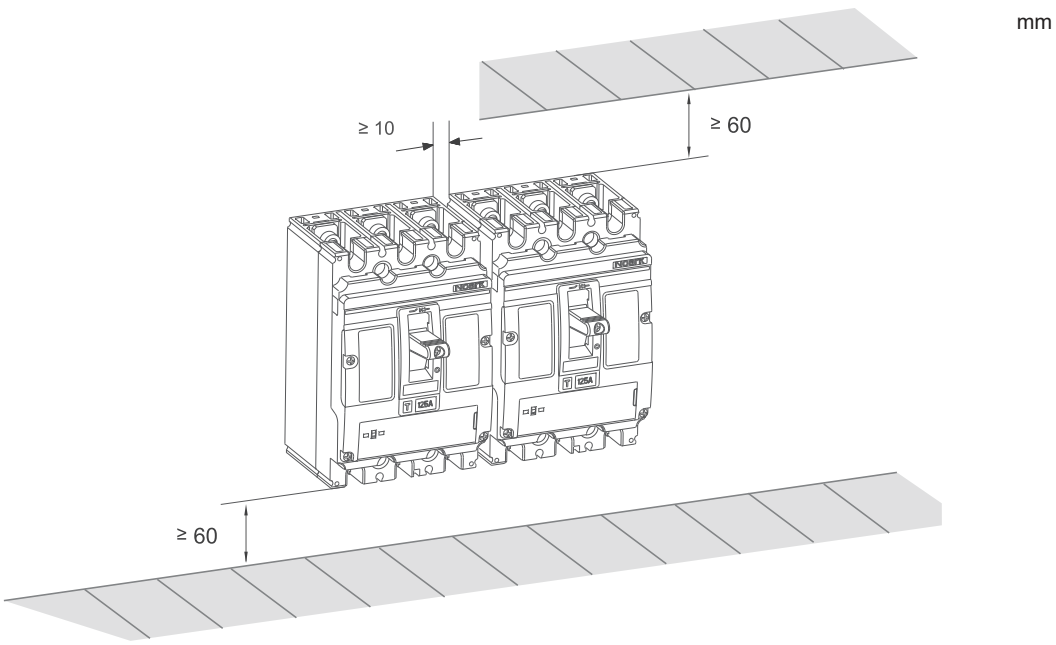

Tripping characteristics

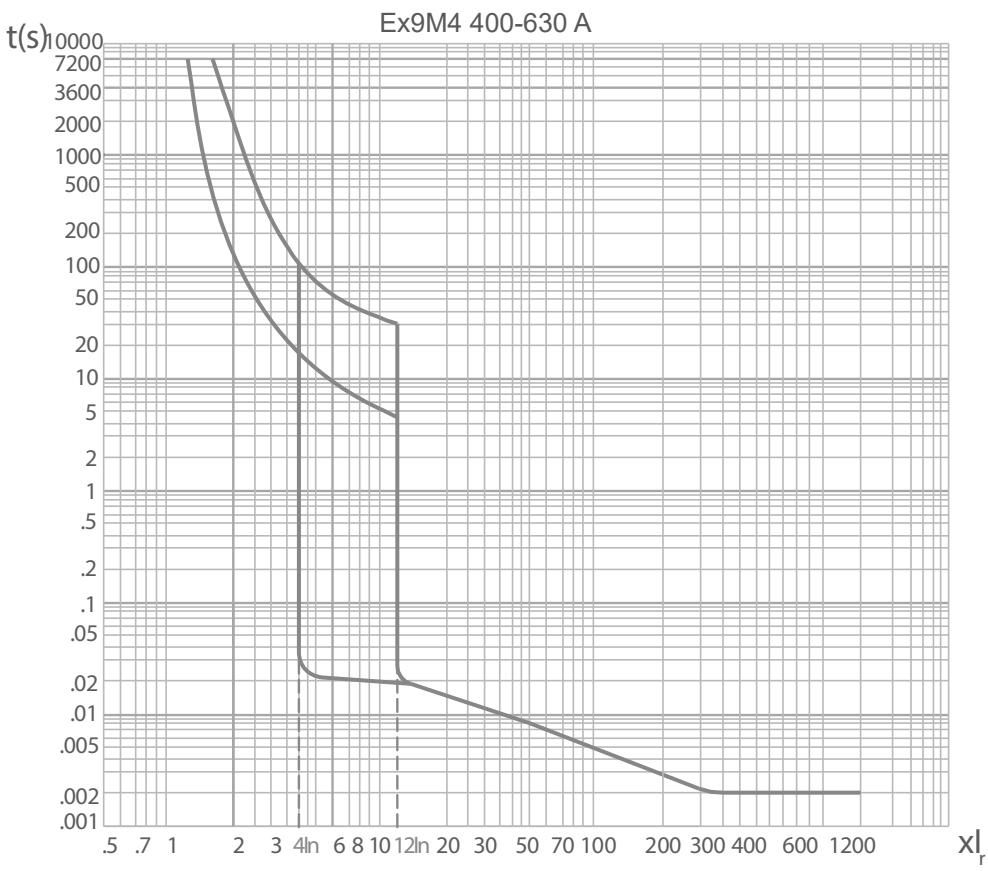

Ordering information p. 51

Technical Data Ex9M5 DC TM

DC TM Moulded Case Circuit Breakers up to 800 A

General parameters

Suitable for commercial as well as industrial applications		
I_r can be set in range (0.7 — 1.0) × I_n		
I_i can be set in range (5 — 10) × I_n		
$I_{iN} = I_i$		
Internal accessories		
Auxiliary contact unit	AX21M	112071
Alarm contact unit	AL21M	112072
Shunt trip releases	SHT24	103723-103730
Undervoltage releases	UVT24	103722-103740
Max. number of installed internal accessories is 2 pcs of AX21M, 1 pc of AL21M and 1 pc of a release (SHT24 or UVT24)		
External accessories		
Direct rotary handle	RHD24	103742
Extended rotary handle	ERH24	103741
Remote motor operators	MOD24	103743 — 103747
Terminal cover, short	TCV24 3P, 4P	103748, 103750
Terminal cover, long	TCE24 3P, 4P	103749, 104855
Phase barrier	PHS24	112113
Connection terminals	MC24 W2	106314
Withdrawable base	DOB24	108891, 108903, 108897, 108909
Mounting screws, screw type terminals as well as phase barriers in the scope of delivery		

Derating coefficient of Tripping Characteristics on accessories combination

Combined accessory	I_n (T) [A]		
	630 A	**700 A**	**800 A**
DOB 24	0.95	0.95	0.9

Ordering information p. 53

Technical Data Ex9M5 DC TM

DC TM Moulded Case Circuit Breakers up to 800 A

Electrical parameters

	Ex9M5B	Ex9M5S	Ex9M5N	Ex9M5Q	Ex9M5H
Tested according to	IEC/EN 60947-2				
Rated op. voltage U_e	750 / 1000 V DC				
Rated insulation voltage U_i	1 000 V				
Rated impulse withstand voltage U_{imp}	12 kV				
Rated frequency	DC				
Rated ultimate short-circuit breaking capacity I_{cu}	25 kA / 1000V	36 kA / 1000V	50 kA / 1000V	70 kA / 1000V	100 kA / 1000V
Rated service short-circuit breaking capacity I_{cs}	25 kA / 1000V	36 kA / 1000V	50 kA / 1000V	70 kA / 1000V	100 kA / 1000V
Rated current	630 / 700 / 800 A				
Utilization category	A				
Mechanical service life	10 000 operation cycles				
Electrical service life	1 000 operation cycles / 1000 V DC				
Total disconnection time at short circuit	< 2 ms				
Line voltage connection	arbitrary above or below				

Dependence of Tripping Characteristics on Ambient Temperature

T [°C]	I_n (T) [A]		
	630 A	700 A	800 A
-40	882	980	1120
-35	866	962	1100
-25	836	927	1060
-15	804	892	1020
-5	772	857	980
0	756	840	960
10	724	805	920
20	693	770	880
30	661	735	840
40	630	700	800
50	580	670	735
60	530	645	670
70	490	575	625

Power dissipation characteristics

I_n	630 A	700 A	800 A
Pole resistance (mΩ)	0.08	0.08	0.08
Pole power dissipation (W)	31.8	39.2	51.2

Ordering information p. 53

Technical Data Ex9M5 DC TM

DC TM Moulded Case Circuit Breakers up to 800 A

Mechanical parameters

Device width 3P / 4P	195 mm / 260 mm
Device height	300 mm
Device depth	142 mm
Mounting	onto panel
Degree of protection	IP40, IP20 terminals
Terminals	M12 screws
Busbar thickness	≤ 10 mm
Busbar width	≤ 50 mm
Cable lug width	≤ 50 mm
Fastening torque of terminals	30 Nm
Ambient temperature	-40 — +70 °C
Relative humidity	≤ 50 % at 40 °C, ≤ 90 % monthly average
Pollution degree	3
Weight 3P / 4P	10.5 kg / 13.5 kg
Mounting position	vertical, can be rotated by 90° in each axis

Derating coefficient of technical parameters based on altitude

Altitude	**≤ 2 000 m**	**3 000 m**	**4 000 m**	**5 000 m**
Derrating op. current I_n coefficient	1	0.96	0.93	0.9
Maximum rated op. voltage U_e	1 000 V DC	900 V DC	850 V DC	800 V DC
Rated insulation voltage U_i	1 000 V DC	930 V DC	870 V DC	800 V DC
Rated impulse withstand voltage U_{imp}	12 kV	10 kV	8 kV	8 kV
Dielectric properties (U_{imp}=12 kV)	3 600 V DC	3 350 V DC	3 110 V DC	2 985 V DC

Dimensions

mm

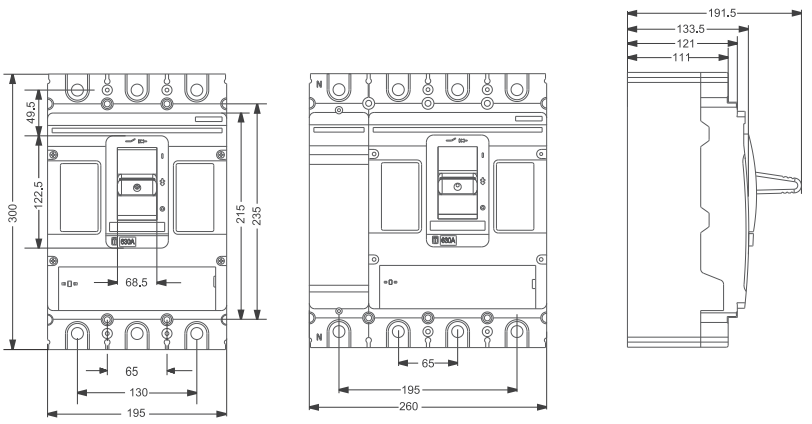

3P 4P

Wiring diagram

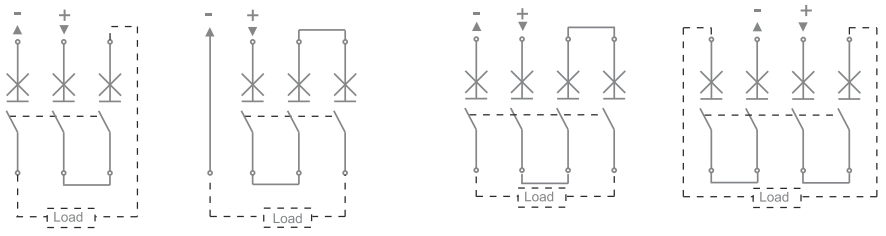

3P / 750 V DC 4P / 1 000 V DC

Ordering information p. 53

Technical Data Ex9M5 DC TM

DC TM Moulded Case Circuit Breakers up to 800 A

Installation space

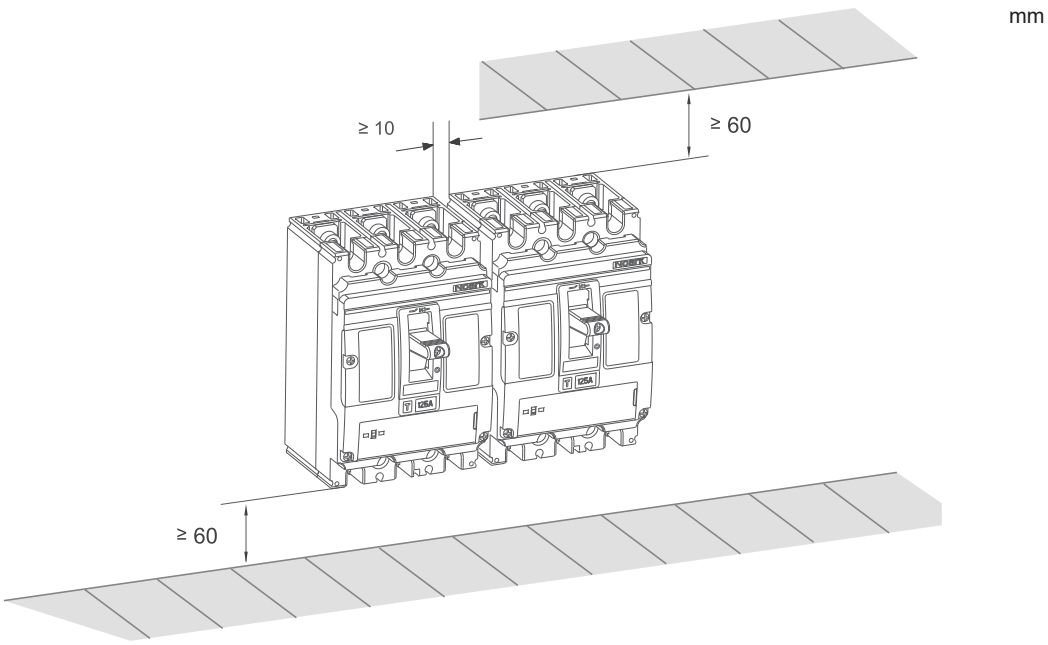

Tripping characteristics

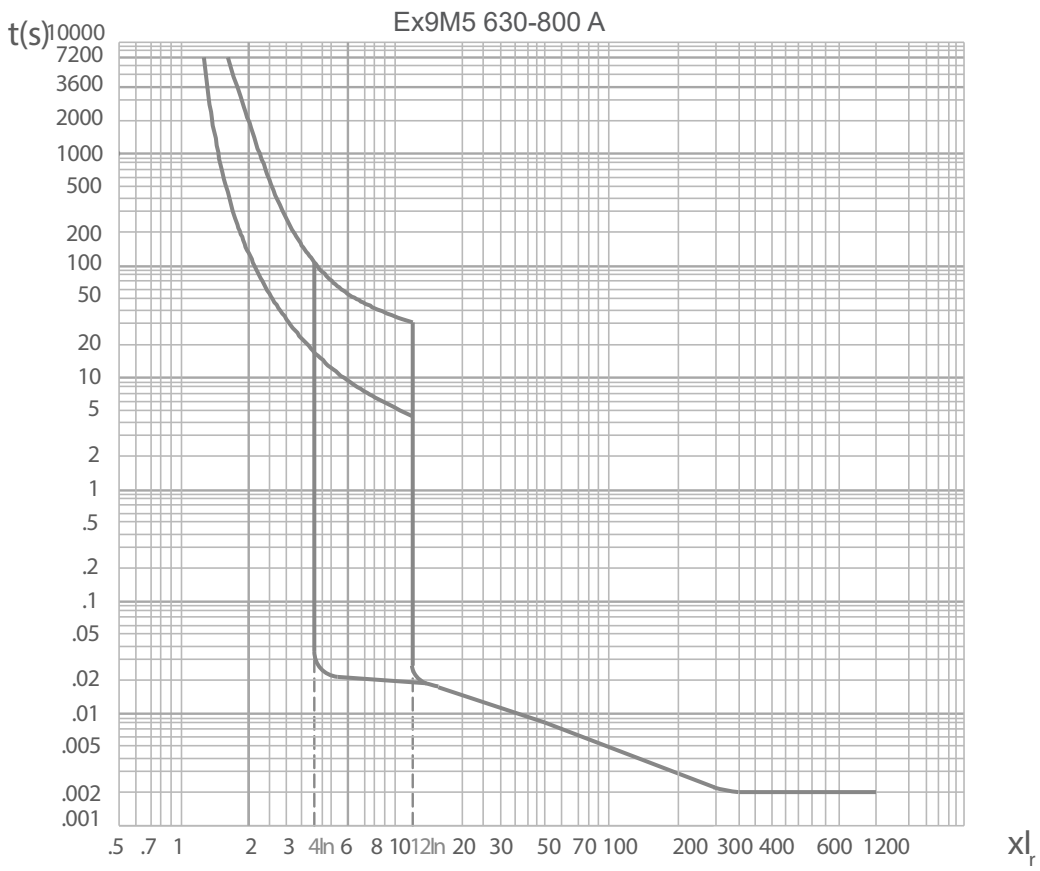

Ordering information p. 53

Technical Data Ex9FP

DC fuse disconnectors

General parameters

For protecting against overload and short-circuit current in direct current and PV applications
Modular design, width 1 MU per pole
Fuse fault indicator
Fuse disconnector cannot be operated by unskilled person (EN 60947-3)

Electrical parameters

Tested according to	IEC / EN 60947-3
Rated operating voltage U_e	1000 V DC
Rated current I_e DC-20B 1000 V DC	up to 30 A
Number of poles	1, 2
Rated insulation voltage U_i	1000 V DC
Rated impulse withstand voltage U_{imp}	6 kV
Utilization category	DC-20B
Rated short-time breaking capacity	33 kA (30 kA from 20A)
Rated conditional short-circuit current	20 kA
Maximum power loss of fuse link	4 W

Mechanical parameters

Device width	18 mm (per pole)
Device height	83 mm (89 mm including rail clip)
Frame size	45 mm
Mounting	easy fastening onto 35 mm device rail (DIN)
Degree of protection	IP20
Terminal capacity	2.5 — 10 mm^2
Ambient temperature	-30 — +70 °C
Altitude	≤ 2000 m
Relative humidity	≤ 95 %
Resistance to humidity and heat	class 2
Pollution degree	3
Installation class	III
Fuse dimension	10 x 38 mm
Weight	0.07 kg per pole

Ordering information p. 56

Technical Data Ex9FP

DC fuse disconnectors

Dimensions

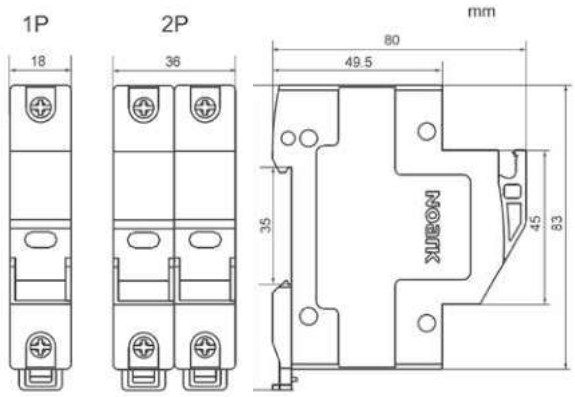

Wiring diagrams

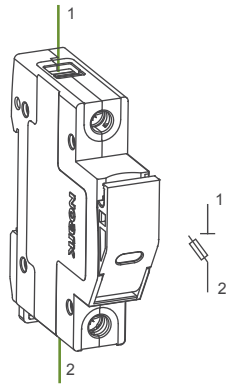

Ordering information p. 56

Technical Data Ex9IP

Modular DC isolators up to 63 A

General parameters

Main switches with isolation function suitable for direct current and Photovoltaic applications
Non-polarized
Modular design, DIN-rail mounting
Max. number of installed accessories is 3 pcs of one contact units (AX3111) or 2 pcs of two contact units (AX3122) and 2 pcs of releases (SHT31, UVT31)

Electrical parameters

Tested according to	IEC/EN 60947-3
Rated operating voltage U_e	250 (1P), 500 (2P), 750 (3P), 1000 V DC (4P)
Rated current I_e	16, 32, 50, 63 A
Module width	1, 2, 3, 4
Utilization category	DC-22B
Rated insulation voltage U_i	1000 V
Rated impulse withstand voltage U_{imp}	6 kV
Rated short-time withstand current I_{cw}, 1 s	12 x I_e
Rated short-circuit making capacity I_{cm}	20 x I_e
Mechanical service life	20 000 operation cycles
Electrical service life	2 000 operation cycles

Mechanical parameters

Device width	18 mm (per pole/module)
Device height	83 mm (89 mm including rail clip)
Frame size	45 mm
Mounting	easy fastening onto 35 mm device rail (DIN)
Degree of protection	IP40, terminals IP20
Terminals	combined lift + open mouthed
Terminal capacity	10 — 35 mm^2
Fastening torque of terminals	2 — 3.5 nm
Busbar thiskness	0.8 — 2 mm
Ambient temperature	-30 — +70 °C
Altitude	≤ 2000 m
Relative humidity	≤ 95 %
Resistance to humidity and heat	class 2
Pollution degree	3
Installation class	III
Weight	0.12 kg (per pole/module)

Ordering information p. 59

Technical Data Ex9IP

Modular DC isolators up to 63 A

Dimensions

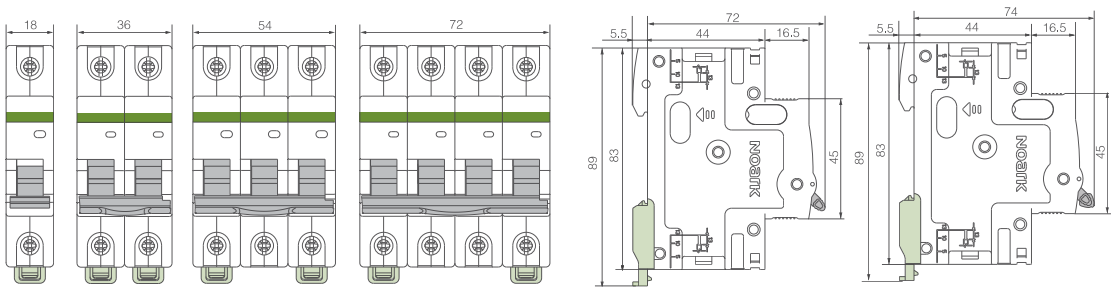

1P 2P 3P 4P 1P 2P, 3P, 4P

Wiring diagrams

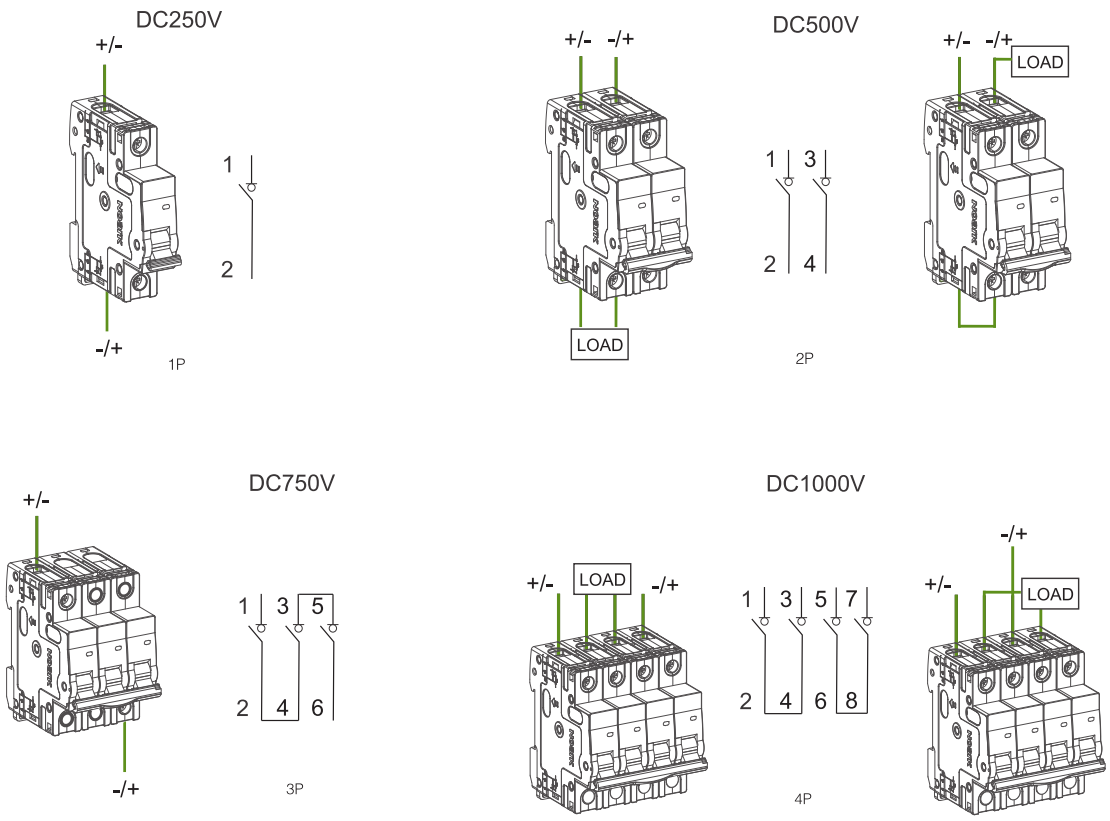

Ordering information p. 59

Technical Data Ex9M1SD DC

DC Moulded Case Switch Disconnectors up to 160 A

General parameters

Suitable for commercial as well as industrial applications		
Internal accessories		
Auxiliary contact unit	AX21M	112071
Shunt trip releases	SHT21	101397 — 101405
Undervoltage releases	UVT21	101406 — 101407
Max. number of installed internal accessories is 2 pcs of AX21M and 1 pc of a release (SHT21 or UVT21)		
External accessories		
Direct rotary handle	RHD21	101410
Extended rotary handle	ERH21	101409
Remote motor operators	MOD21	101411 — 101415
Terminal cover, short	TCV21 3P, 4P	101439, 102372
Terminal cover, long	TCE21 3P, 4P	101440, 102373
Phase barrier	PHS21	112110
Connection terminals	MC21	103705 — 103708
DIN-rail adapter	DRA21	106319
Mounting screws, screw type terminals as well as phase barriers in the scope of delivery		

Ordering information p. 67

Technical Data Ex9M1 AC SD

DC Moulded Case Switch Disconnectors up to 160 A

Electrical parameters

Tested according to	IEC/EN 60947-3
Rated op. voltage U_e	750 / 1 000 V DC
Rated insulation voltage U_i	1 000 V
Rated impulse withstand voltage U_{imp}	8 kV
Rated frequency	DC
Rated short-time making capacity I_{cm}	2 kA
Rated short-time withstand current I_{cw}	2 kA / 1 s 2 kA / 3 s
Rated current	160 A
Utilization category	DC-22A, DC-23A, DC-PV2
Mechanical service life	15 000 operation cycles
Electrical service life	2 000 operation cycles / 1 000 V DC
Total disconnection time at short circuit	< 2 ms
Line voltage connection	arbitrary above or below

Power dissipation characteristics

I_n	**160 A**
Pole resistance (mΩ)	0.8
Pole power dissipation (W)	20.5

Mechanical parameters

Device width 3P / 4P	90 mm / 120 mm
Device height	140 mm
Device depth	81.6 mm
Mounting	onto panel
Degree of protection	IP40, IP20 terminals
Terminals	box
Terminal capacity	4 — 95 mm^2
Fastening torque of terminals	8 Nm
Ambient temperature	-40 — +70 °C
Relative humidity	≤ 50 % at 40 °C, ≤ 90 % monthly average
Pollution degree	3
Weight 3P / 4P	1.05 kg / 1.55 kg
Mounting position	vertical, can be rotated by 90° in each axis

Derating coefficient of technical parameters based on altitude

Altitude	**≤ 2 000 m**	**3 000 m**	**4 000 m**	**5 000 m**
Derrating op. current I_n coefficient	1	0.96	0.93	0.9
Maximum rated op. voltage U_e	1 000 V DC	900 V DC	850 V DC	800 V DC
Rated insulation voltage U_i	1 000 V DC	930 V DC	870 V DC	800 V DC
Rated impulse withstand voltage U_{imp}	8 kV	8 kV	8 kV	8 kV
Dielectric properties (U_{imp}=8 kV)	3 110 V DC	2 892 V DC	2 705 V DC	2 488 V DC

Ordering information p. 67

Technical Data Ex9M1SD DC

DC Moulded Case Switch Disconnectors up to 160 A

Dimensions

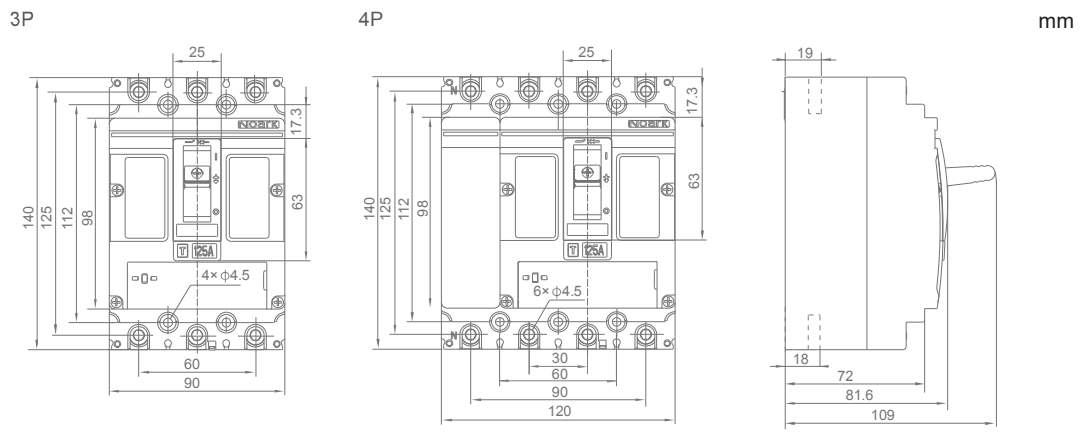

Wiring diagram

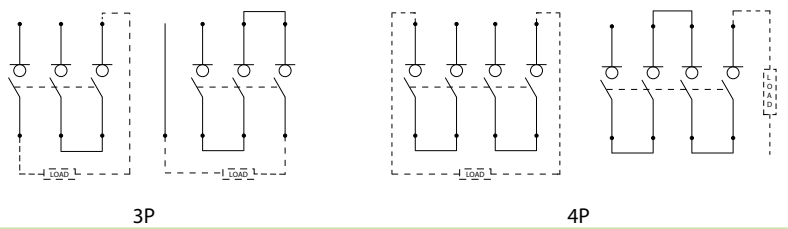

Installation space

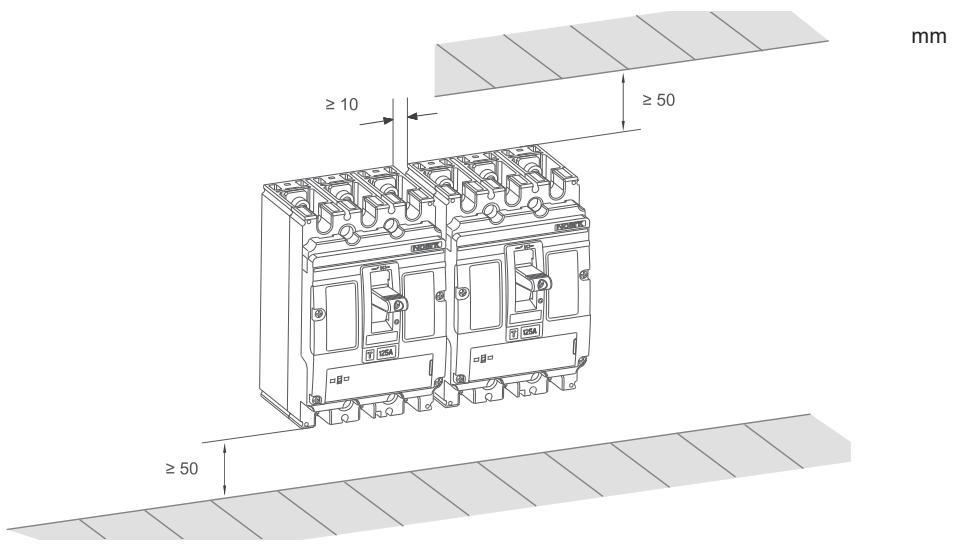

Ordering information p. 67

Technical Data Ex9M2SD DC

DC Moulded Case Switch Disconnectors up to 250 A

General parameters

Suitable for commercial as well as industrial applications		
Internal accessories		
Auxiliary contact unit	AX21M	112071
Shunt trip releases	SHT22	101416 — 101424
Undervoltage releases	UVT22	101425 — 101426
Max. number of installed internal accessories is 2 pcs of AX21M and 1 pc of a release (SHT22 or UVT22)		
External accessories		
Direct rotary handle	RHD22	101429
Extended rotary handle	ERH22	101428
Remote motor operators	MOD22	101430 — 101434
Terminal cover, short	TCV22 3P, 4P	101442, 102374
Terminal cover, long	TCE22 3P, 4P	101443, 102375
Phase barrier	PHS22	112111
Connection terminals	MC22	103709, 103869, 103711, 103713
DIN-rail adapter	DRA22	106320
Mounting screws, screw type terminals as well as phase barriers in the scope of delivery		

Ordering information p. 67

Technical Data Ex9M2SD DC

DC Moulded Case Switch Disconnectors up to 250 A

Electrical parameters

Tested according to	IEC/EN 60947-3
Rated op. voltage U_e	750 / 1 000 V DC
Rated insulation voltage U_i	1 000 V
Rated impulse withstand voltage U_{imp}	8 kV
Rated frequency	DC
Rated short-time making capacity I_{cm}	3.2 kA
Rated short-time withstand current I_{cw}	3.2 kA / 1 s 3.2 kA / 3 s
Rated current	250 A
Utilization category	DC-22A, DC-23A, DC-PV2
Mechanical service life	15 000 operation cycles
Electrical service life	1 500 operation cycles / 1 000 V DC
Total disconnection time at short circuit	< 2 ms
Line voltage connection	arbitrary above or below

Power dissipation characteristics

I_n	**250 A**
Pole resistance (mΩ)	0.4
Pole power dissipation (W)	25

Mechanical parameters

Device width 3P / 4P	105 mm / 140 mm
Device height	157 mm
Device depth	96.5 mm
Mounting	onto panel
Degree of protection	IP40, IP20 terminals
Terminals	box
Terminal capacity	10 — 120 mm^2
Fastening torque of terminals	25 Nm
Ambient temperature	-40 — +70 °C
Relative humidity	≤ 50 % at 40 °C, ≤ 90 % monthly average
Pollution degree	3
Weight 3P / 4P	1.85 kg / 2.5 kg
Mounting position	vertical, can be rotated by 90° in each axis

Derating coefficient of technical parameters based on altitude

Altitude	**≤ 2 000 m**	**3 000 m**	**4 000 m**	**5 000 m**
Derrating op. current I_n coefficient	1	0.96	0.93	0.9
Maximum rated op. voltage U_e	1 000 V DC	900 V DC	850 V DC	800 V DC
Rated insulation voltage U_i	1 000 V DC	930 V DC	870 V DC	800 V DC
Rated impulse withstand voltage U_{imp}	8 kV	8 kV	8 kV	8 kV
Dielectric properties (U_{imp}=8 kV)	3 110 V DC	2 892 V DC	2 705 V DC	2 488 V DC

Ordering information p. 67

Technical Data Ex9M2SD DC

DC Moulded Case Switch Disconnectors up to 250 A

Dimensions

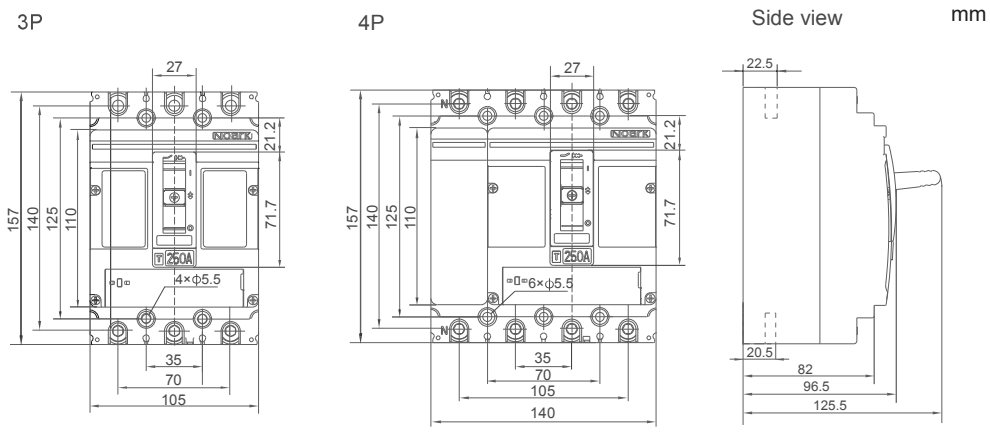

Wiring diagram

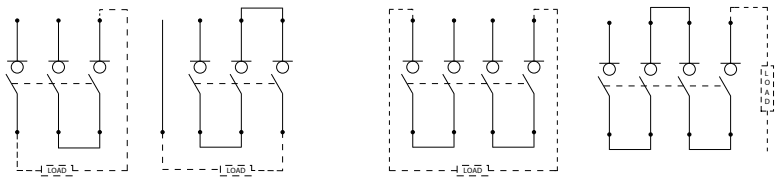

Installation space

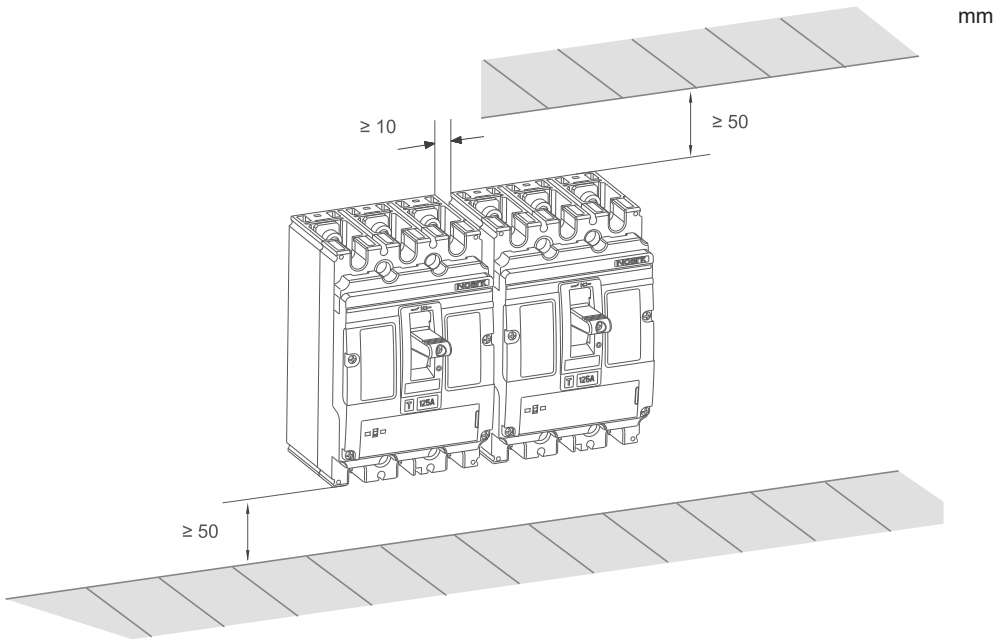

Ordering information p. 67

Technical Data Ex9M3SD DC

DC Moulded Case Switch Disconnectors up to 400 A

General parameters

Suitable for commercial as well as industrial applications		
Internal accessories		
Auxiliary contact unit	AX21M	112071
Shunt trip releases	SHT22	101416 — 101424
Undervoltage releases	UVT22	101425 — 101426
Max. number of installed internal accessories is 2 pcs of AX21M and 1 pc of a release (SHT22 or UVT22)		
External accessories		
Direct rotary handle	RHD23	101483
Extended rotary handle	ERH23	101482
Remote motor operators	MOD23	101484 — 101488
Terminal cover, short	TCV23 3P, 4P	101489, 102376
Terminal cover, long	TCE23 3P, 4P	101490, 102377
Phase barrier	PHS23	112112
Connection terminals	MC23	103715 — 103722
Mounting screws, screw type terminals as well as phase barriers in the scope of delivery		

Ordering information p. 67

Technical Data Ex9M3SD DC

DC Moulded Case Switch Disconnectors up to 400 A

Electrical parameters

Tested according to	IEC/EN 60947-3
Rated op. voltage U_e	750 / 1 000 V DC
Rated insulation voltage U_i	1 000 V
Rated impulse withstand voltage U_{imp}	12 kV
Rated frequency	DC
Rated short-time making capacity I_{cm}	5 kA
Rated short-time withstand current I_{cw}	5 kA / 1 s 5 kA / 3 s
Rated current	400 A
Utilization category	DC-22A, DC-23A, DC-PV2
Mechanical service life	15 000 operation cycles
Electrical service life	1 500 operation cycles / 1 000 V DC
Total disconnection time at short circuit	< 2 ms
Line voltage connection	arbitrary above or below

Power dissipation characteristics

I_n	**400 A**
Pole resistance (mΩ)	0.15
Pole power dissipation (W)	24

Mechanical parameters

Device width 3P / 4P	140 mm / 185 mm
Device height	255 mm
Device depth	118.5 mm
Mounting	onto panel
Degree of protection	IP40, IP20 terminals
Terminals	M10 screws
Busbar thickness	≤ 8 mm
Busbar width	≤ 30 mm
Cable lug width	≤ 30 mm
Fastening torque of terminals	25 Nm
Ambient temperature	-40 — +70 °C
Relative humidity	≤ 50 % at 40 °C, ≤ 90 % monthly average
Pollution degree	3
Weight 3P / 4P	5 kg / 6.5 kg
Mounting position	vertical, can be rotated by 90° in each axis

Derating coefficient of technical parameters based on altitude

Altitude	**≤ 2 000 m**	**3 000 m**	**4 000 m**	**5 000 m**
Derrating op. current I_n coefficient	1	0.96	0.93	0.9
Maximum rated op. voltage U_e	1 000 V DC	900 V DC	850 V DC	800 V DC
Rated insulation voltage U_i	1 000 V DC	930 V DC	870 V DC	800 V DC
Rated impulse withstand voltage U_{imp}	12 kV	10 kV	8 kV	8 kV
Dielectric properties (U_{imp}=12 kV)	3 600 V DC	3 350 V DC	3 110 V DC	2 985 V DC

Ordering information p. 67

Technical Data Ex9M3SD DC

DC Moulded Case Switch Disconnectors up to 400 A

Dimensions

mm

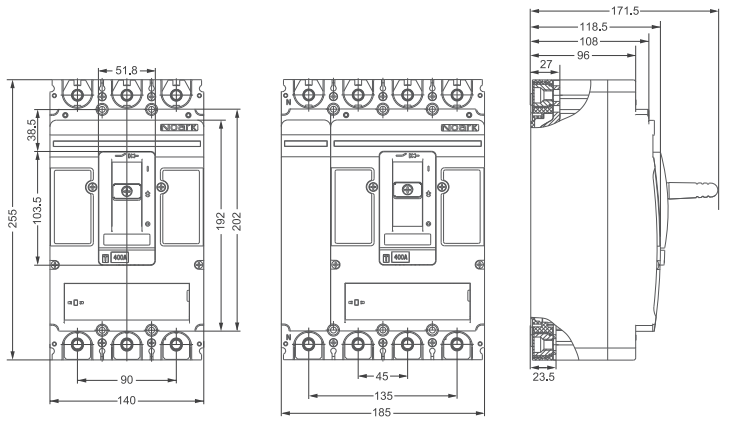

3P 4P

Wiring diagram

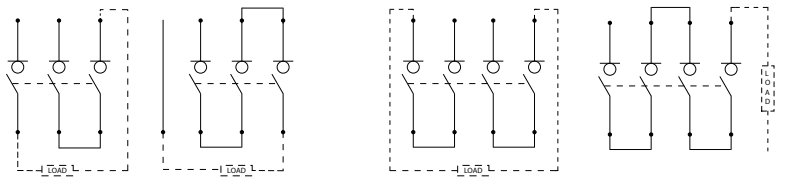

3P 4P

Installation space

mm

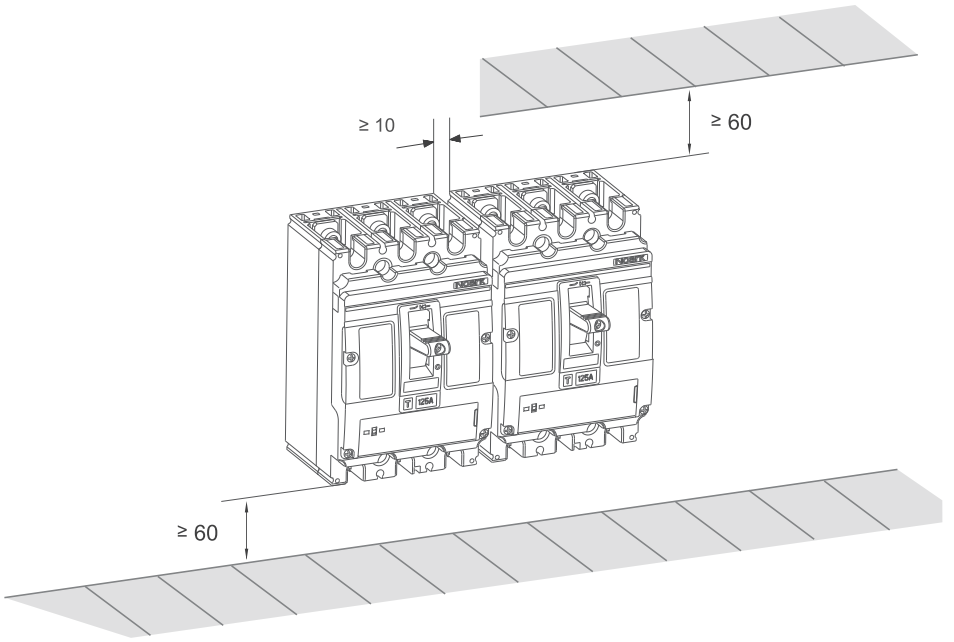

Ordering information p. 67

Technical Data Ex9M4SD DC

DC Moulded Case Switch Disconnectors up to 630 A

General parameters

Suitable for commercial as well as industrial applications		
Internal accessories		
Auxiliary contact unit	AX21M	112071
Shunt trip releases	SHT24	103723 — 103730
Undervoltage releases	UVT24	103722 — 103740
Max. number of installed internal accessories is 2 pcs of AX21M and 1 pc of a release (SHT24 or UVT24)		
External accessories		
Direct rotary handle	RHD24	103742
Extended rotary handle	ERH24	103741
Remote motor operators	MOD24	103743 — 103747
Terminal cover, short	TCV24 3P, 4P	103748, 103750
Terminal cover, long	TCE24 3P, 4P	103749, 104855
Phase barrier	PHS24	112113
Connection terminals	MC24 W2	106314
Mounting screws, screw type terminals as well as phase barriers in the scope of delivery		

Ordering information p. 67

Technical Data Ex9M4SD DC

DC Moulded Case Switch Disconnectors up to 630 A

Electrical parameters

Tested according to	IEC/EN 60947-3
Rated op. voltage U_e	750 / 1 000 V DC
Rated insulation voltage U_i	1 000 V
Rated impulse withstand voltage U_{imp}	12 kV
Rated frequency	DC
Rated short-time making capacity I_{cm}	14 kA
Rated short-time withstand current I_{cw}	8 kA / 1 s 8 kA / 3 s
Rated current	630 A
Utilization category	DC-22A, DC-23A, DC-PV2
Mechanical service life	10 000 operation cycles
Electrical service life	1 000 operation cycles / 1 000 V DC
Total disconnection time at short circuit	< 2 ms
Line voltage connection	arbitrary above or below

Power dissipation characteristics

I_n	**630 A**
Pole resistance (mΩ)	0.08
Pole power dissipation (W)	31.8

Mechanical parameters

Device width 3P / 4P	195 mm / 260 mm
Device height	300 mm
Device depth	142 mm
Mounting	onto panel
Degree of protection	IP40, IP20 terminals
Terminals	M12 screws
Busbar thickness	≤ 10 mm
Busbar width	≤ 50 mm
Cable lug width	≤ 50 mm
Fastening torque of terminals	30 Nm
Ambient temperature	-40 — +70 °C
Relative humidity	≤ 50 % at 40 °C, ≤ 90 % monthly average
Pollution degree	3
Weight 3P / 4P	9.5 kg / 12.5 kg
Mounting position	vertical, can be rotated by 90° in each axis

Derating coefficient of technical parameters based on altitude

Altitude	**≤ 2 000 m**	**3 000 m**	**4 000 m**	**5 000 m**
Derrating op. current I_n coefficient	1	0.96	0.93	0.9
Maximum rated op. voltage U_e	1 000 V DC	900 V DC	850 V DC	800 V DC
Rated insulation voltage U_i	1 000 V DC	930 V DC	870 V DC	800 V DC
Rated impulse withstand voltage U_{imp}	12 kV	10 kV	8 kV	8 kV
Dielectric properties (U_{imp}=12 kV)	3 600 V DC	3 350 V DC	3 110 V DC	2 985 V DC

Ordering information p. 67

Technical Data Ex9M4SD DC

DC Moulded Case Switch Disconnectors up to 630 A

Dimensions

mm

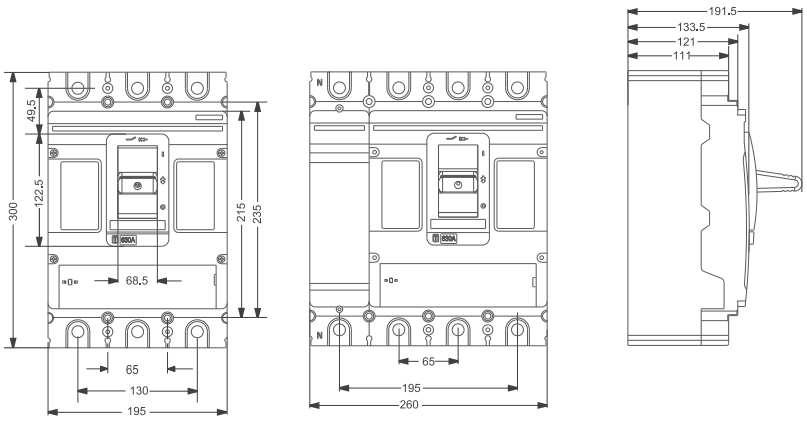

3P 4P

Wiring diagram

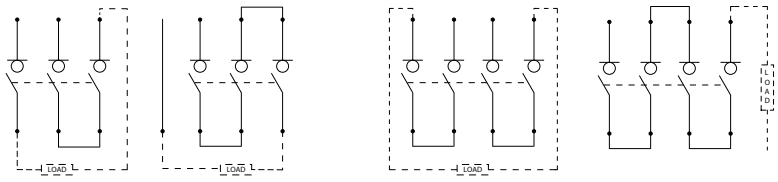

3P 4P

Installation space

mm

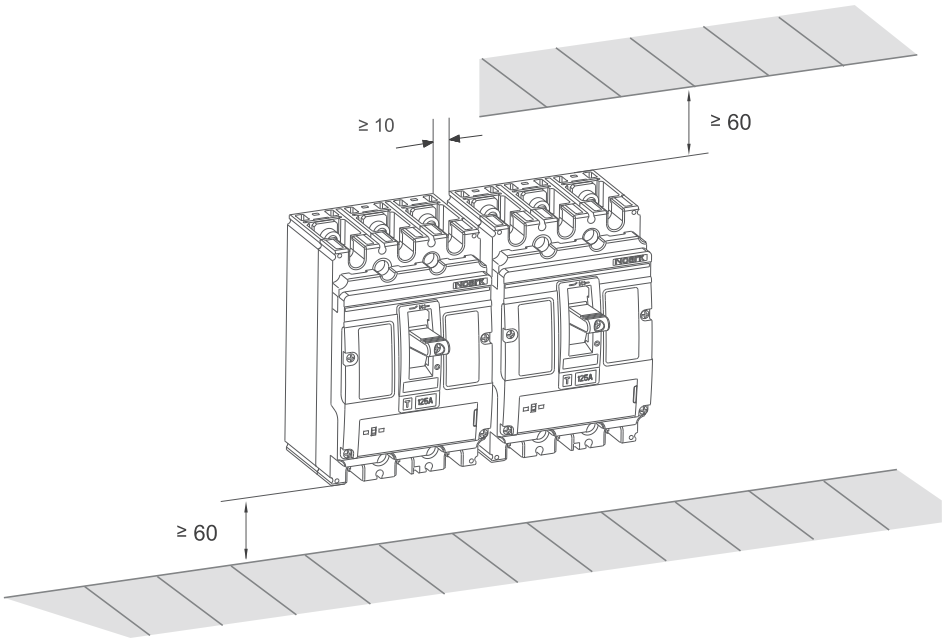

Ordering information p. 67

Technical Data Ex9M5SD DC

DC Moulded Case Switch Disconnectors up to 800 A

General parameters

Suitable for commercial as well as industrial applications		
Internal accessories		
Auxiliary contact unit	AX21M	112071
Shunt trip releases	SHT24	103723 — 103730
Undervoltage releases	UVT24	103722 — 103740
Max. number of installed internal accessories is 2 pcs of AX21M and 1 pc of a release (SHT24 or UVT24)		
External accessories		
Direct rotary handle	RHD24	103742
Extended rotary handle	ERH24	103741
Remote motor operators	MOD24	103743 — 103747
Terminal cover, short	TCV24 3P, 4P	103748, 103750
Terminal cover, long	TCE24 3P, 4P	103749, 104855
Phase barrier	PHS24	112113
Connection terminals	MC24 W2	106314
Mounting screws, screw type terminals as well as phase barriers in the scope of delivery		

Ordering information p. 67

Technical Data Ex9M5SD DC

DC Moulded Case Switch Disconnectors up to 800 A

Electrical parameters

Tested according to	IEC/EN 60947-3
Rated op. voltage U_e	1 000 V DC
Rated insulation voltage U_i	1 250 V
Rated impulse withstand voltage U_{imp}	12 kV
Rated frequency	DC
Rated short-time making capacity I_{cm}	17 kA
Rated short-time withstand current I_{cw}	10 kA / 1 s 10 kA / 3 s
Rated current	800 A
Utilization category	DC-22A, DC-23A, DC-PV2
Mechanical service life	10 000 operation cycles
Electrical service life	1 000 operation cycles / 1 000 V DC
Total disconnection time at short circuit	< 2 ms
Line voltage connection	arbitrary above or below

Power dissipation characteristics

I_n	**800 A**
Pole resistance (mΩ)	0.08
Pole power dissipation (W)	51.2

Mechanical parameters

Device width 3P / 4P	195 mm / 260 mm
Device height	300 mm
Device depth	142 mm
Mounting	onto panel
Degree of protection	IP40, IP20 terminals
Terminals	M12 screws
Busbar thickness	≤ 10 mm
Busbar width	≤ 50 mm
Cable lug width	≤ 50 mm
Fastening torque of terminals	30 Nm
Ambient temperature	-40 — +70 °C
Relative humidity	≤ 50 % at 40 °C, ≤ 90 % monthly average
Pollution degree	3
Weight 3P / 4P	9.5 kg / 12.5 kg
Mounting position	vertical, can be rotated by 90° in each axis

Derating coefficient of technical parameters based on altitude

Altitude	**≤ 2 000 m**	**3 000 m**	**4 000 m**	**5 000 m**
Derrating op. current I_n coefficient	1	0.96	0.93	0.9
Maximum rated op. voltage U_e	1 000 V DC	900 V DC	850 V DC	800 V DC
Rated insulation voltage U_i	1 000 V DC	930 V DC	870 V DC	800 V DC
Rated impulse withstand voltage U_{imp}	12 kV	10 kV	8 kV	8 kV
Dielectric properties (U_{imp}=12 kV)	3 600 V DC	3 350 V DC	3 110 V DC	2 985 V DC

Ordering information p. 67

Technical Data Ex9M5SD DC

DC Moulded Case Switch Disconnectors up to 800 A

Dimensions

mm

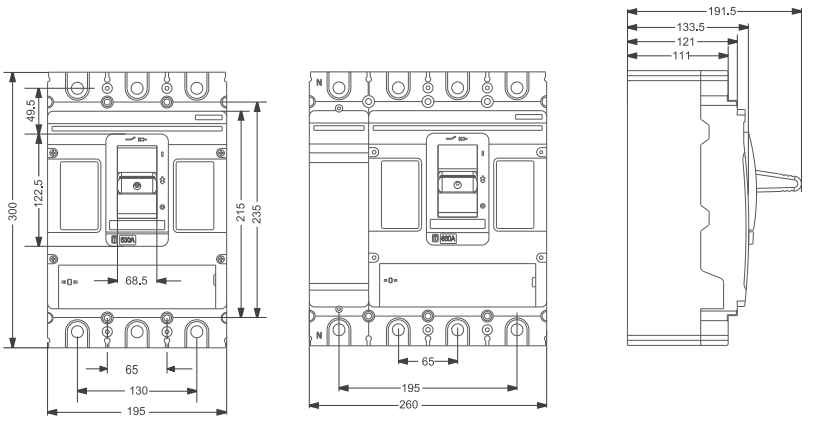

3P 4P

Wiring diagram

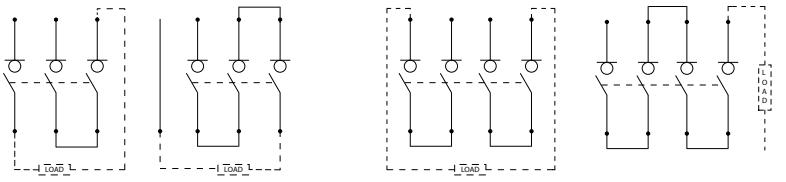

3P 4P

Installation space

mm

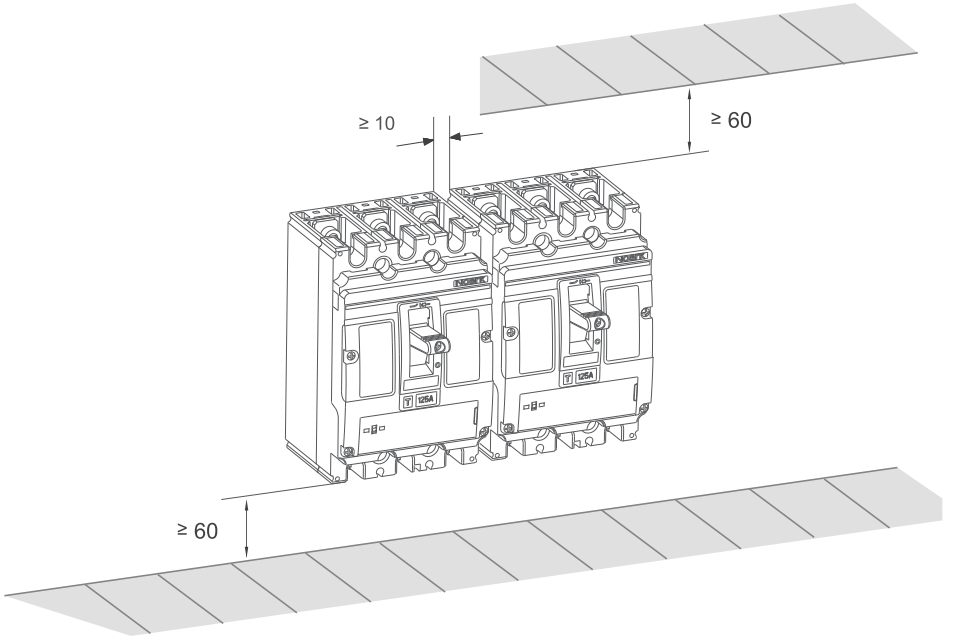

Ordering information p. 67

Technical Data Ex9M6SD DC

DC Moulded Case Switch Disconnectors up to 1 600 A

General parameters

Suitable for household as well as industrial applications		
Internal accessories		
Auxiliary contact unit	AX21M	112071
Shunt trip releases	SHT26	110460 — 110467
Undervoltage releases	UVT26	110468 — 110469
Max. number of installed internal accessories is 2 pcs of AX21 and 1 pc of a release (SHT26 or UVT26)		
External accessories		
Extended handle	LHD26	110698
Extended rotary handle	ERH26	108846
Front connection plate	JP26	110694 — 110697
Mounting screws, screw type terminals as well as phase barriers in the scope of delivery		

Ordering information p. 67

Technical Data Ex9M6SD DC

DC Moulded Case Switch Disconnectors up to 1 600 A

Electrical parameters

Tested according to	IEC/EN 60947-3
Rated op. voltage U_e	750 / 1 500 V DC
Rated insulation voltage U_i	1 500 V
Rated impulse withstand voltage U_{imp}	12 kV
Rated frequency	DC
Rated short-time making capacity I_{cm}	19.2 kA
Rated short-time withstand current I_{cw}	19.2 kA / 1 s
Rated current	800 / 1 000 / 1 250 / 1 600 A
Utilization category	DC-22A, DC-22B
Mechanical service life	6 000 operation cycles
Electrical service life	1 000 operation cycles / 1 000 V DC
Total disconnection time at short circuit	< 2 ms
Line voltage connection	arbitrary above or below

Power dissipation characteristics

I_n	800 A	1 000 A	1 250 A	1 600 A
Pole resistance (mΩ)	0.08	0.08	0.04	0.04
Pole power dissipation (W)	51.2	80.0	62.5	102.4

Mechanical parameters

Device width 3P / 4P	210 mm / 280 mm
Device height	286 mm
Device depth	191 mm
Mounting	onto panel
Degree of protection	IP40, IP20 terminals
Terminals	M10 screws
Busbar thickness	≤ 10 mm
Busbar width	≤ 50 mm
Cable lug width	≤ 50 mm
Fastening torque of terminals	25 — 30 Nm
Ambient temperature	-40 — +70 °C
Relative humidity	≤ 50 % at 40 °C, ≤ 90 % monthly average
Pollution degree	3
Weight 3P / 4P	13 / 17 kg
Mounting position	vertical, can be rotated by 90° in each axis

Derating coefficient of technical parameters based on altitude

Altitude	≤ 2 000 m	3 000 m	4 000 m	5 000 m
Derrating op. current I_n coefficient	1	0.96	0.93	0.9
Maximum rated op. voltage U_e	1 000 V DC	900 V DC	850 V DC	800 V DC
Rated insulation voltage U_i	1 000 V DC	930 V DC	870 V DC	800 V DC
Rated impulse withstand voltage U_{imp}	12 kV	10 kV	8 kV	8 kV
Dielectric properties (U_{imp}=12 kV)	3 600 V DC	3 350 V DC	3 110 V DC	2 985 V DC

Ordering information p. 67

Technical Data Ex9M6SD DC

DC Moulded Case Switch Disconnectors up to 1 600 A

Dimensions

mm

3P

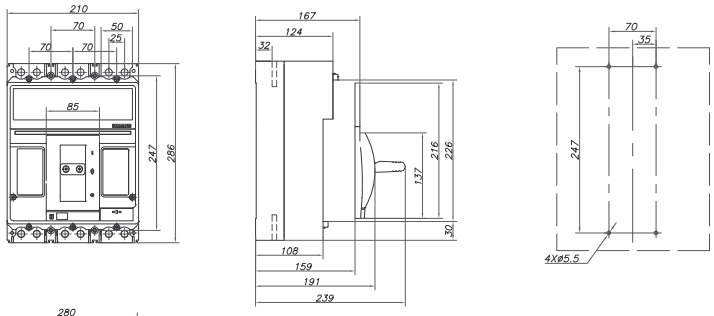

4P

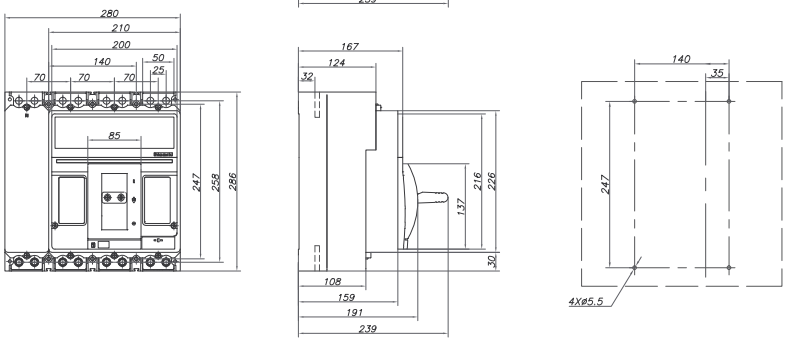

Wiring diagram

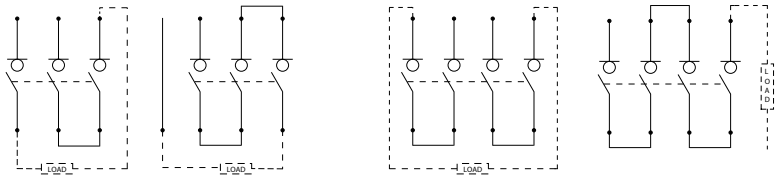

3P 4P

Installation space

mm

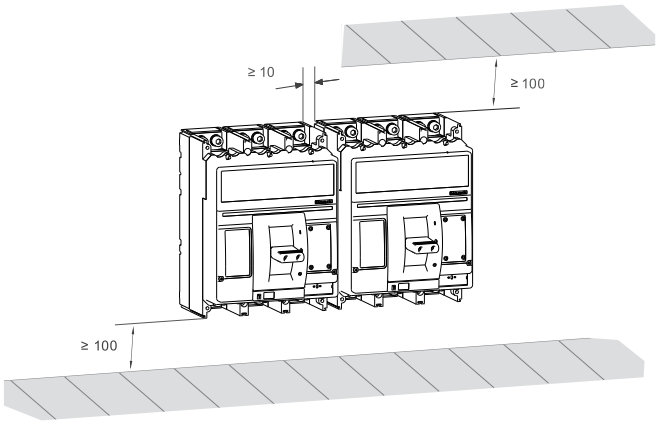

Ordering information p. 67

Technical Data Ex9LB63

Residual Current Circuit Breakers type B, 10 kA

General parameters

Electronic evaluation principle - more accurate measuring of residual current
Suitable for household as well as industrial applications
B type - sensitivity to residual AC, pulsating and smooth DC current, high frequency up to 1 kHz
Device must be tested regularly. Local laws or regulations can be applied. Recommend is a testing period of 6 months in normal condition, 1 month in heavy conditions
In case all wires are not connected at 4-pole RCCB, it is necessary to ensure that circuit of the test button T is supplied with appropriate voltage (by means of mutual connection of respective terminals of the RCCB, see wiring diagram)
Internal SPD protection to improve service life and make it applicable to multiple installation environments
Parallel construction of the type A/AC and type B internal parts. If required voltage is not available for type B internal electronics, the protection type A and AC will be still provided
Indication of electrical tripping

Electrical parameters

Tested according to	IEC/EN 61008-1, IEC/EN 62423
Rated operational voltage U_e	230/240 V AC (2-pole) 400/415 V AC (4-pole)
Min. voltage for RCD function	voltage independent for type A and AC voltage dependent for type B (from 85 V AC)
Voltage range of the test button T	150 — 254 V AC (2-pole) 150 — 440 V AC (4-pole)
Rated frequency f	50 Hz
Conditional short circuit strength I_{nc}	10 kA
Rated current I_n	25, 40, 63 A
Rated residual current $I_{\Delta n}$	30, 100, 300 mA
Sensitivity to residual current	B type - residual AC, pulsating and smooth DC current, high frequency (1 kHz)
Rated impulse withstand voltage U_{imp}	4 kV
Rated insulation voltage U_i	500 V
Surge current proof	3000 A
Mechanical service life	10 000 operation cycles
Electrical service life	2 000 operation cycles
Back-up fuse for overload	
I_n = 25 A	max. 25 A gG
I_n = 40 A	max. 32 A gG
I_n = 63 A	max. 50 A gG
Back-up fuse for short circuit	
I_n = 25 A	max. 63 A gG
I_n = 40 A	max. 63 A gG
I_n = 63 A	max. 63 A gG
Rated making capacity I_m (rated residual making capacity $I_{\Delta m}$)	
I_n = 25 A	500 A
I_n = 40 A	500 A
I_n = 63 A	630 A
Line voltage connection	arbitrary above or below

Ordering information p. 70

Technical Data Ex9LB63

Residual Current Circuit Breakers type B, 10 kA

Mechanical parameters

Device width	54 mm (2-pole), 72 mm (4-pole)
Device height	91 mm including rail clip
Frame size	45 mm
Mounting	easy fastening onto 35 mm device rail (DIN)
Degree of protection	IP20
Terminals	combined lift + open mouthed
Terminal capacity	1 — 25 mm^2
Fastening torque of terminals	2.5 Nm
Busbar thickness	0.8 — 2 mm
Ambient temperature	-25 — +40 °C
Altitude	≤ 2000 m
Relative humidity	≤ 95 %
Resistance to humidity and heat	class 2
Pollution degree	2
Installation class	III
Weight	0.28 kg (2-pole), 0.43 kg (4-pole)

Dimensions

mm

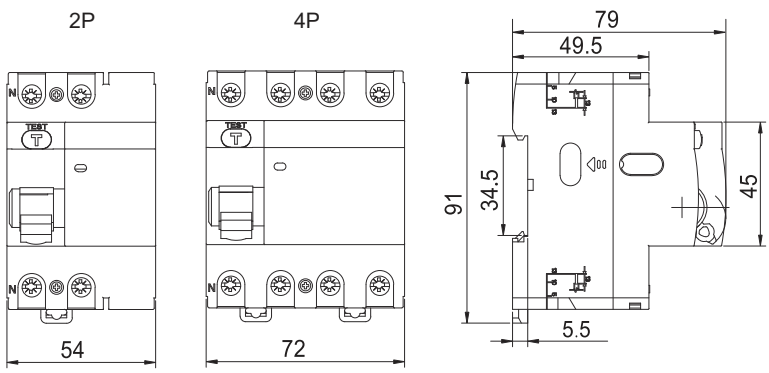

Wiring diagrams

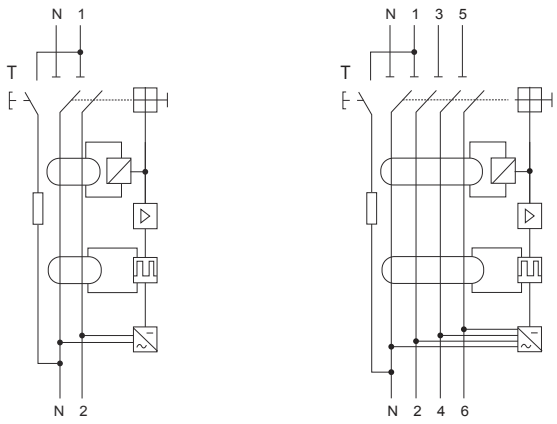

2P 4P

Ordering information p. 70

Technical Data Ex9LB63

Residual Current Circuit Breakers type B, 10 kA

Tripping characteristics

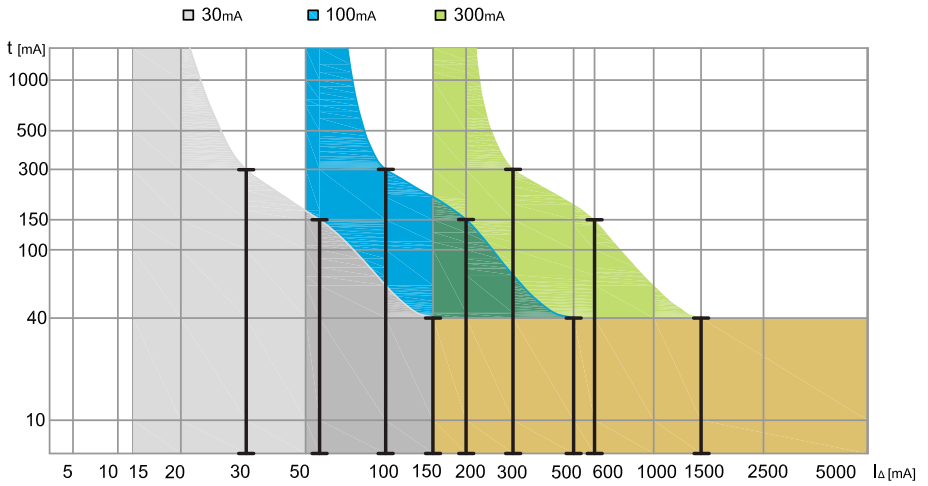

Power loss

I_n	I_Δ	2P	4P
25 A	**30 mA**	6.6 W	8.6 W
	100 mA	4.3 W	8.6 W
	300 mA	4.3 W	8.6 W
40 A	**30 mA**	6.9 W	13.7 W
	100 mA	10.5 W	13.7 W
	300 mA	10.5 W	13.7 W
63 A	**30 mA**	16.5 W	21.6 W
	100 mA	10.9 W	21.6 W
	300 mA	10.9 W	21.6 W

Ordering information p. 70

Technical Data Ex9EMS

Smart Energy Meters

General parameters

All products have MID certification
1 or 2-tariff versions
Optional M-Bus or ModBus communication
Direct or CT connection

Electrical parameters

	Ex9EMS 1P 1M	Ex9EMS 1P 2M	Ex9EMS 3P 4M
Tested according to	EN 50470-1/3		
Nominal voltage U_n	230 V AC	230 V AC	3x230/400 V AC
Operational voltage	195-253 V AC	195-253 V AC	3x230/400 V ± 20%
Rated frequency f	50 Hz ± 10%	50 Hz ± 10%	45-60 Hz
Insulation capabilities:			
AC voltage withstand	4 kV for 1 minute		
Impulse voltage withstand	6 kV - 1.2 µs waveform		
Basic current I_b	5 A	5 A	5 A (1.5 A for CT version)
Maximum rated current I_{max}	45 A	100 A	100 A (6 A for CT version)
Operational current range	$0.4\%I_b$ - I_{max}		
Overcurrent withstand	$30*I_{max}$ for 0.01 s		
Power consumption (active - reactive)	≤ 2 W/phase - ≤ 10 W/phase		
Test output flash rate (RED LED)	10 000 Imp/kWh		
Pulse output rate	10 000/2 000/1 000/100/10/1/0.1/0.01 Imp/kWh		
Pulse width	≤ 5 625 W ... 32 ms > 5 625 W ... 11.2 ms	1 000/100/10/1/0.1/0.01 Imp/kWh ... 31 ms 2 000 Imp/kWh < 30 kW ... 31 ms 2 000 Imp/kWh > 30 kW ... 15 ms 10 000 Imp/kWh < 6 kW ... 31 ms 10 000 Imp/kWh > 6 kW ... 15 ms 10 000 Imp/kWh > 12 kW ... 5 ms	1 000/2 000/10 000 pulses • 0 - 4 999 W ... 40 ms • 5 000 - 9 999 W ... 20 ms • 10 000-19 999 W ... 10ms • 20 000 - 39 999 W ... 5ms • > 40 000 W ... 2.5 ms 100 pulses • < 50 000 W ... 40 ms • > 50 000 W ... 20 ms Other pulses • always ... 40 ms
Data store	The data can be stored for more than 10 years without power		
Accuracy class	B (=1% accuracy)		
Basic errors:			
$0.05*I_b$	Cos φ = 1 ... ± 1.5%		
$0.1*I_b$	Cos φ = 0.5L ... ± 1.5% Cos φ = 0.5C ... ± 1.5%		
$0.1*I_b$ - I_{max}	Cos φ = 1 ... ± 1.0%		
$0.2*I_b$ - I_{max}	Cos φ = 0.5L ... ± 1.0% Cos φ = 0.5C ... ± 1.0%		
Infrared specification			
Infrared wavelengths	900 - 1 000 nm		
Communication distance	Direct contact		
Protocol	IEC62056-21:2002 (IEC1107)		
M-Bus com. spec. (MB version only)			
Bus type	M-Bus		
Baud rate	300, 600, 1 200, 2 400, 4 800, and 9 600 (default)		
Range	≤ 1 000 m		
Downlink signal	Master to slave. Voltage modulation		
Uplink signal	Slave to master. Current modulation		

Ordering information p. 72

Technical Data Ex9EMS

Smart Energy Meters

Electrical parameters

	Ex9EMS 1P 1M	Ex9EMS 1P 2M	Ex9EMS 3P 4M
M-Bus com. spec. (MB version only)			
Cable	JYSTY (nx2x0.8)		
Protocol	EN13757-3		
Max. number of meters	64*		
ModBus com. spec. (MO version only)			
Bus type	RS485		
Protocol	ModBus RTU with 16 bit CRC		
Baud rate	1 200, 2 400, 4 800 and 9 600 (default)		
Address range	1-247 user settable		
Maximum bus load	60 meters per bus*		
Range	1 000 m		

*Note that the maximum number of meters is dependent on the converter, baudrate (the higher the baudrate, the smaller the number of meters which can be used) and the circumstances under which the meters are installed.

Software for programing energy meters thru infrared eye can be downloaded from our website www.noark-electric.eu.

For more informations and settings of Smart Energy Meters please see User Manual from our website.

Mechanical parameters

	Ex9EMS 1P 1M	Ex9EMS 1P 2M	Ex9EMS 3P 4M
Device width	17.5 mm	35.8 mm	70 mm
Device height	90 mm	92.5 mm	92.4 mm
Frame size	45 mm		
Mounting	onto 35 mm device rail (DIN)		
Degree of protection	IP 50		
Terminals	lift and screw terminals		
Max. L and N terminals capacity			
Solid copper	8 mm^2	35 mm^2	35 mm^2
Flex core	-	-	25 mm^2
Fastening torque of L and N terminals	2.4 Nm		
Max. Auxiliary terminals capacity	2.5 mm^2		
Fastening torque of auxiliary terminals	0.1 Nm		
Ambient temperature	-25°C — +55°C	-40°C — +70°C	Direct: -40°C — +70°C CT: -25°C — +70°C
Operating humidity	≤ 75%		
Insulation class	II		
Weight	0.08 kg	0.16 kg	0.39 kg

Dimensions

Ex9EMS 1P 1M

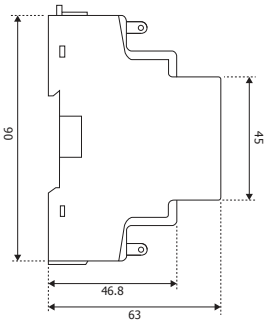

Ex9EMS 1P 2M

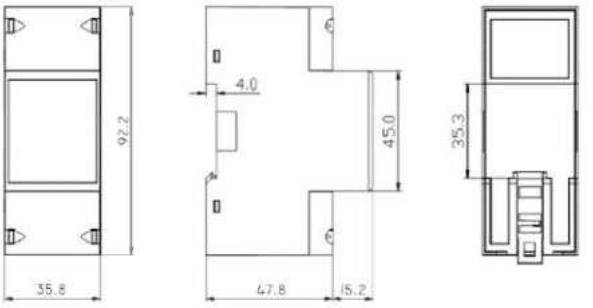

Ordering information p. 72

Technical Data Ex9EMS

Smart Energy Meters

Dimensions

Ex9EMS 3P 4M

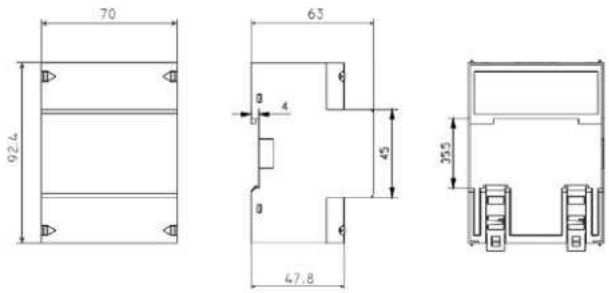

Wiring diagrams

Ex9EMS 1P 1M

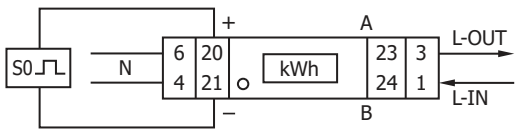

1	Phase line in (L-IN)	
3	Phase line out (L-OUT)	
4	Neutral line in (N)	
6	Neutral line out (N)	
20/21	Pulse output contact (S0)	
23/24	Ex9EMS 1P 1M 45A 1T	Not in use
	Ex9EMS 1P 1M 45A 2T	External tariff input (230V)
	Ex9EMS 1P 1M 45A MB 2T	M-Bus communication contact
	Ex9EMS 1P 1M 45A MO 2T	ModBus communication contact

Ex9EMS 1P 2M

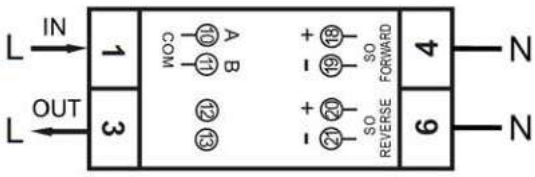

1	Phase line in (L-IN)
3	Phase line out (L-OUT)
4	Neutral line in (N)
6	Neutral line out (N)
10/11	M-Bus/ModBus communication contact (Ex9EMS 1P 2M 100A MB 2T & Ex9EMS 1P 2M 100A MO 2T only)
12/13	External tariff input (Ex9EMS 1P 2M 100A 2T only)
18/19	Pulse output contact (S0) forward
20/21	Pulse output contact (S0) reverse

Ex9EMS 3P 4M - Direct connected - 3P 4W

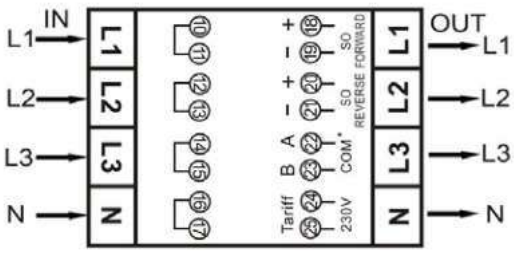

L1 (in) Phase 1 input - L1 (out) Phase 1 output
L2 (in) Phase 2 input - L2 (out) Phase 2 output
L3 (in) Phase 3 input - L3 (out) Phase 3 output
N (in) Neutral input - N (out) neutral output

10/11	not used
12/13	not used
14/15	not used
16/17	not used
18/19	Forward pulse output contact (S0)
20/21	Reverse pulse output contact (S0)
22/23	M-Bus / ModBus communication contact
24/25	External tariff input (230V)

Ex9EMS 3P 4M - Direct connected - 3P 3W Open Delta (Aron)

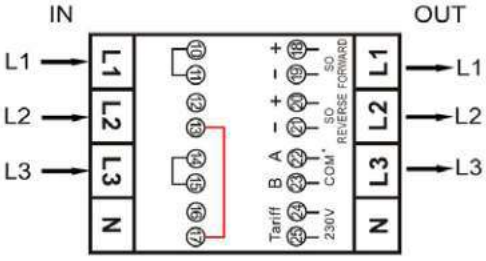

L1 (in) Phase 1 input - L1 (out) Phase 1 output
L2 (in) Phase 2 input - L2 (out) Phase 2 output
L3 (in) Phase 3 input - L3 (out) Phase 3 output
N (in) not used - N (out) not used

10/11	not used
12/13	to be connected to 16/17
14/15	not used
16/17	to be connected to 12/13
18/19	Forward pulse output contact (S0)
20/21	Reverse pulse output contact (S0)
22/23	M-Bus / ModBus communication contact
24/25	External tariff input (230V)

Ordering information p. 72

Technical Data Ex9EMS

Smart Energy Meters

Wiring diagrams

Ex9EMS 3P 4M - Direct connected - 3P 3W Delta

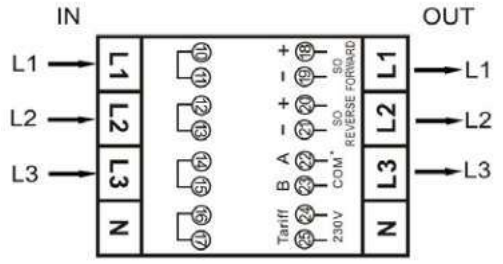

L1 (in) Phase 1 input - L1 (out) Phase 1 output
L2 (in) Phase 2 input - L2 (out) Phase 2 output
L3 (in) Phase 3 input - L3 (out) Phase 3 output
N (in) not used - N (out) not used

10/11	not used
12/13	not used
14/15	not used
16/17	not used
18/19	Forward pulse output contact (S0)
20/21	Reverse pulse output contact (S0)
22/23	M-Bus / ModBus communication contact
24/25	External tariff input (230V)

Ex9EMS 3P 4M - Direct connected - 1P 2W Single phase

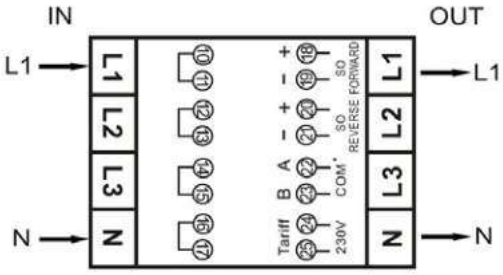

L1 (in) Phase 1 input - L1 (out) Phase 1 output
L2 (in) not used - L2 (out) not used
L3 (in) not used - L3 (out) not used
N (in) Neutral input - N (out) neutral output

10/11	not used
12/13	not used
14/15	not used
16/17	not used
18/19	Forward pulse output contact (S0)
20/21	Reverse pulse output contact (S0)
22/23	M-Bus / ModBus communication contact
24/25	External tariff input (230V)

Ex9EMS 3P 4M - CT - 3P 4W

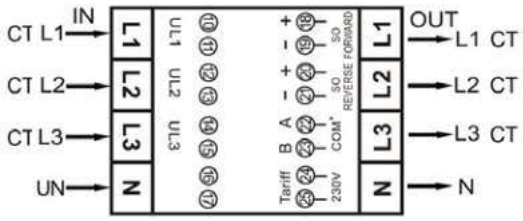

CT1 (in) Phase 1 input - CT1 (out) Phase 1 output
CT2 (in) Phase 2 input - CT2 (out) Phase 2 output
CT3 (in) Phase 3 input - CT3 (out) Phase 3 output
UN (in) Neutral input - UN (out) neutral output

10/11	Phase 1 - UL1
12/13	Phase 2 - UL2
14/15	Phase 3 - UL3
16/17	not used
18/19	Forward pulse output contact (S0)
20/21	Reverse pulse output contact (S0)
22/23	M-Bus / ModBus communication contact
24/25	External tariff input (230V)

Ex9EMS 3P 4M - CT - 3P 3W Open Delta (Aron)

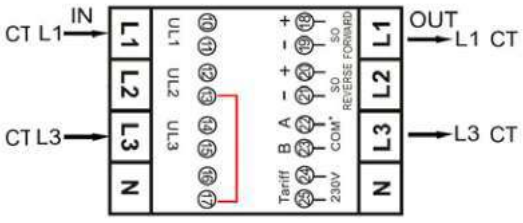

CT1 (in) Phase 1 input - CT1 (out) Phase 1 output
CT2 (in) not used - CT2 (out) not used
CT3 (in) Phase 3 input - CT3 (out) Phase 3 output
UN (in) not used - UN (out) not used

10/11	Phase 1 - UL1
12	Phase 2 - UL2
13	to be connected to 17
14/15	Phase 3 - UL3
17	to be connected to 13 (16 not used)
18/19	Forward pulse output contact (S0)
20/21	Reverse pulse output contact (S0)
22/23	M-Bus / ModBus communication contact
24/25	External tariff input (230V)

Ex9EMS 3P 4M - CT - 3P 3W Delta

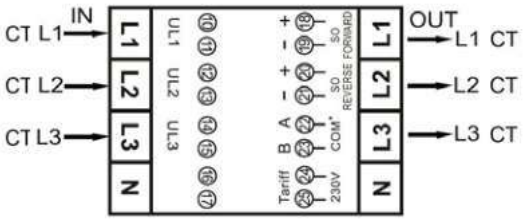

CT1 (in) Phase 1 input - CT1 (out) Phase 1 output
CT2 (in) Phase 2 input - CT2 (out) Phase 2 output
CT3 (in) Phase 3 input - CT3 (out) Phase 3 output
UN (in) not used - UN (out) not used

10/11	Phase 1 - UL1
12/13	Phase 2 - UL2
14/15	Phase 3 - UL3
16/17	not used
18/19	Forward pulse output contact (S0)
20/21	Reverse pulse output contact (S0)
22/23	M-Bus / ModBus communication contact
24/25	External tariff input (230V)

Ordering information p. 72

Technical Data Ex9EMS

Smart Energy Meters

Wiring diagrams

Ex9EMS 3P 4M - CT - 1P 2W - Single phase

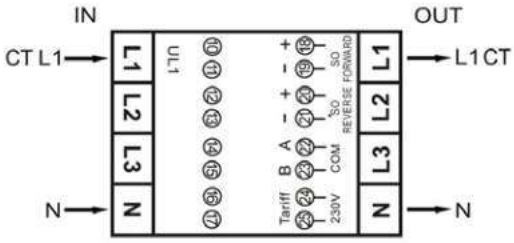

CT1 (in) Phase 1 input - CT1 (out) Phase 1 output
CT2 (in) not used - CT2 (out) not used
CT3 (in) not used - CT3 (out) not used
UN (in) Neutral input - UN (out) neutral output

10/11	Phase 1 - UL1
12/13	not used
14/15	not used
16/17	not used
18/19	Forward pulse output contact (S0)
20/21	Reverse pulse output contact (S0)
22/23	M-Bus / ModBus communication contact
24/25	External tariff input (230V)

Ordering information p. 72

Technical Data Ex9UEP

DC surge protection devices PV T2, I_n = 20 kA (8/20 µs)

General parameters

Designed and suitable for photovoltaic applications
Modular devices, plug-in module design
Indication window helps users to know the status of device
Optional remote-signaling contact

Electrical parameters

	Ex9UEP 20(R) 1P 600 / 750V		**Ex9UEP 20(R) 2P 600 / 750V**		**Ex9UEP 20(R) 2P 1000 / 1200 / 1500V**			**Ex9UEP 20(R) 3P 1000 / 1200 / 1500V**		
Tested according to	EN 50539-11									
Classified type (test class)	PV T2 (Class II, C, Type 2)									
Technology	MOV (Varistor)									
Protection function	thermal									
Protection mode	+ → PE − → PE + ↔ -									
Connection configuration	I		U		U			Y		
Rated operational DC voltage U_n	600 V	750 V	600 V	750 V	1000 V	1200 V	1500 V	1000 V	1200 V	1500 V
Max. continuous op. DC voltage U_{CPV} + → PE, − → PE + ↔ -	600 V 600 V	750 V 750 V	600 V 1200 V	750 V 1500 V	1000 V 1000 V	1200 V 1200 V	1500 V 1500 V	1000 V 1000 V	1200 V 1200 V	1500 V 1500 V
Max. system voltage $U_{OC\ max}$ (according to general design rules IEC 62548, IEC/HD 60364-7-712)	545 V	680 V	545 V	680 V	905 V	1090 V	1365 V	905 V	1090 V	1365 V
Nominal frequency f	DC									
Nominal discharge current I_n (8/20 µs)	20 kA									
Max. discharge current I_{max} (8/20 µs)	40 kA									
Total discharge current I_{TOTAL} (8/20 µs)	-		40 kA		40 kA			40 kA		
Protection voltage U_p at I_n + → PE, − → PE + ↔ -	2.3 kV 2.3 kV	2.5 kV 2.5 kV	2.3 kV 4.2 kV	2.5 kV 5 kV	3.8 kV 3.8 kV	4.2 kV 4.2 kV	5 kV 5 kV	3.8 kV 3.8 kV	4.2 kV 4.2 kV	5 kV 5 kV
Residual current I_{PE} at U_{REF} DC	< 50 µA									
Residual current I_{PE} at U_{REF} AC	< 1 mA									
Short-circuit current rating I_{SCPV}	1000 A									
Number of ports	1									
Type of LV system	DC, grounded PV systems		DC, ungrounded PV systems		DC, grounded PV systems			DC, ungrounded PV systems		
SPD overload behaviour mode	OCM									
Remote contact (optional)	1 changeover (CO)									
Remote contact op. voltage / current AC U_{max} / I_{max} DC U_{max} / I_{max}	250 V AC / 0.5 A 250 V DC / 0.1 A; 75 V DC / 0.5 A									

Ordering information p. 76

Technical Data Ex9UEP

DC surge protection devices PV T2, I_n = 20 kA (8/20 µs)

Mechanical parameters

Device width	17.5 mm (per module)
Device height	83 mm (89 mm including rail clip)
Frame size	45 mm
Method of mounting	fixed
Mounting	easy fastening onto 35 mm device rail (DIN)
Mounting position	arbitrary
Degree of protection	IP40, terminals IP20
Terminals	lift, M5 screws
Terminal capacity	2.5 — 25 mm^2
Fastening torque of terminals	2 — 3.5 Nm
Remote contact terminal capacity	0.14 — 1.5 mm^2
Location	indoor
Installation class	III
Pollution degree	2
Accessibility	inaccessible
Ambient temperature	-40 — +70 °C
Altitude	≤ 2000 m
Relative humidity	5 — 95 %
Weight (per pole)	0.12 kg

Table of tolerance zones at 1 mA

	Max. continuous operational voltage U_c	Voltage tolerance zone at 1mA
Ex9UEP 20	500/1000 V	643.5 - 786.5 V
	600/1200 V	738 - 902 V
	750/1500 V	950 - 1100 V

Ordering information p. 76

Technical Data Ex9UEP

DC surge protection devices PV T2, I_n = 20 kA (8/20 µs)

Dimensions

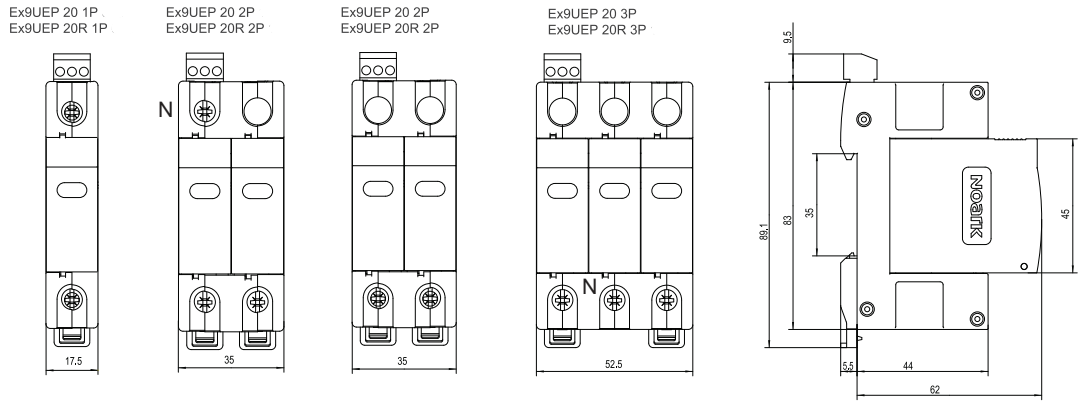

Connection diagrams, protection mode

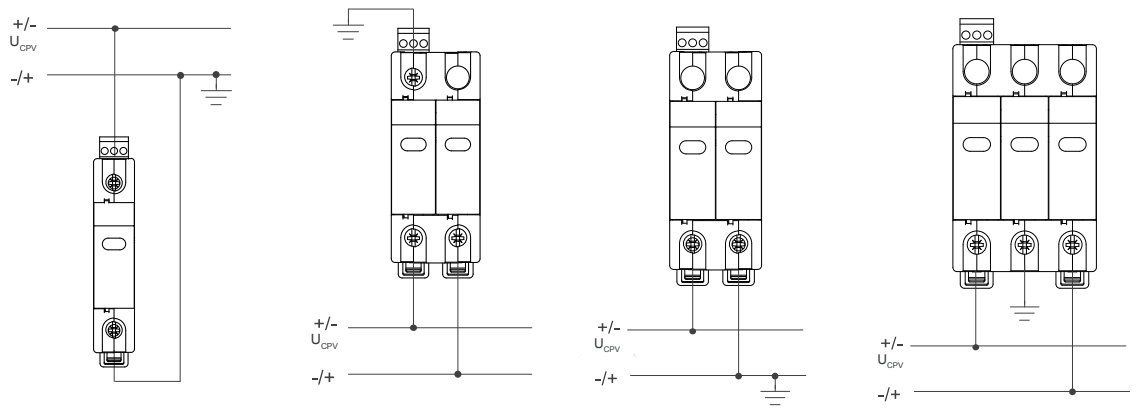

Ex9UEP 20 1P
Ex9UEP 20R 1P

Ex9UEP 20 2P
Ex9UEP 20R 2P

Ex9UEP 20 2P
Ex9UEP 20R 2P

Ex9UEP 20 3P
Ex9UEP 20R 3P

Ordering information p. 76

Technical Data Ex9UEP1+2

DC Surge Protection Devices PV T1+T2, I_{imp} = 6.25 kA (10/350 µs)

General parameters

Designed and suitable for photovoltaic applications
Modular devices, plug-in module design
Indication window helps users to know the status of device
Optional remote-signaling contact

Electrical parameters

	Ex9UEP1+2 6.25(R) 1P 500 / 600 / 750V			**Ex9UEP1+2 6.25(R) 2P 500 / 600 / 750V**			**Ex9UEP1+2 6.25(R) 2P 1000 / 1200 / 1500V**			**Ex9UEP1+2 6.25(R) 3P 1000 / 1200 / 1500V**		
Tested according to	EN 61643-31											
Classified type (test class)	PV T1+T2 (Class I+II, B+C, Type 1+2)											
Technology	MOV (Varistor)											
Protection function	thermal											
Protection mode	+ → PE − → PE + ↔ -											
Connection configuration	I			U			U			Y		
Rated operational DC voltage U_n [V]	500	600	750	500	600	750	1000	1200	1500	1000	1200	1500
Max. continuous op. DC voltage U_{CPV} [V] + → PE, − → PE + ↔ -	 500 500	 600 600	 750 750	 500 1000	 600 1200	 750 1500	 1000 1000	 1200 1200	 1500 1500	 1000 1000	 1200 1200	 1500 1500
Nominal frequency f	DC											
Nominal discharge current I_n (8/20 µs)	20 kA											
Max. discharge current I_{max} (8/20 µs)	40 kA											
Impulse current I_{imp} (10/350 µs) + → PE, − → PE + ↔ -	 6.25 kA 6.25 kA			 6.25 kA 6.25 kA			 6.25 kA 6.25 kA			 6.25 kA 6.25 kA		
Protection voltage U_p at I_n [kV] + → PE, − → PE + ↔ -	 2.0 2.0	 2.3 2.3	 2.5 2.5	 2.0 3.8	 2.3 4.2	 2.5 5.0	 3.8 3.8	 4.2 4.2	 5.0 5.0	 3.8 3.8	 4.2 4.2	 5.0 5.0
Residual current I_{PE} at U_{REF} DC	< 50 µA											
Residual current I_{PE} at U_{REF} AC	< 1 mA											
Short-circuit current rating I_{SCPV}	1000 A											
Number of ports	1											
Type of LV system	DC, grounded PV systems			DC, ungrounded PV systems			DC, grounded PV systems			DC, ungrounded PV systems		
SPD overload behaviour mode	OCM											
Remote contact (optional)	1 changeover (CO)											
Remote contact op. voltage / current AC U_{max} / I_{max} DC U_{max} / I_{max}	 250 V AC / 1 A 250 V DC / 0.1 A; 75 V DC / 0.5 A											

Ordering information p. 80

Technical Data Ex9UEP1+2

DC Surge Protection Devices PV T1+T2, I_{imp} = 6.25 kA (10/350 µs)

Mechanical parameters

Device width	17.5 mm (per module)
Device height	83 mm (89 mm including rail clip)
Frame size	45 mm
Method of mounting	fixed
Mounting	easy fastening onto 35 mm device rail (DIN)
Mounting position	arbitrary
Degree of protection	IP20
Terminals	lift, M5 screws
Terminal capacity	2.5 — 25 mm^2
Fastening torque of terminals	2 — 3.5 Nm
Remote contact terminal capacity	0.14 — 1.5 mm^2
Location	indoor
Installation class	III
Pollution degree	2
Accessibility	inaccessible
Ambient temperature	-40 — +80°C
Altitude	≤ 2000 m
Relative humidity	5 — 95 %
Weight (per pole)	0.12 kg

Dimensions

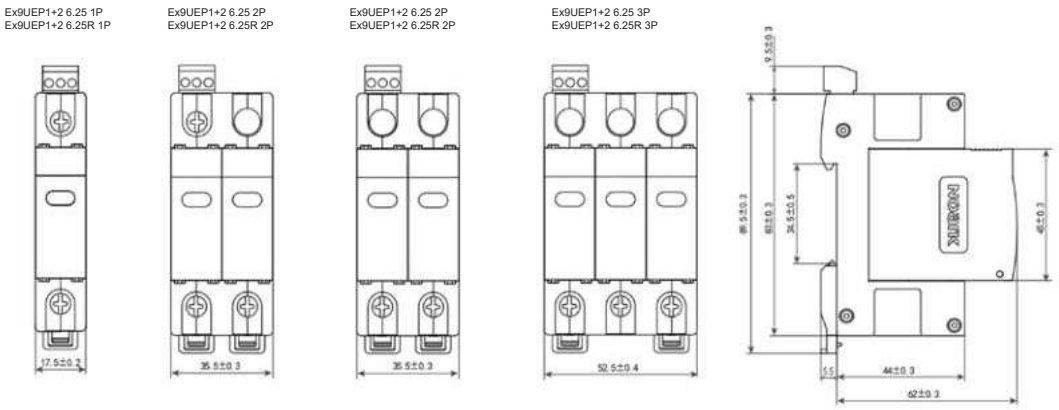

DC SPDs

Ordering information p. 80

Technical Data Ex9UEP1+2

DC Surge Protection Devices PV T1+T2, I_{imp} = 6.25 kA (10/350 µs)

Connection diagrams, protection mode

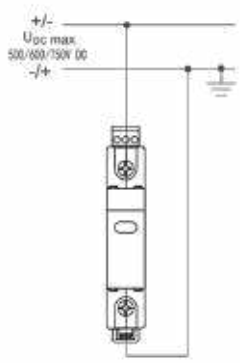

Ex9UEP1+2 6.25 1P
Ex9UEP1+2 6.25R 1P

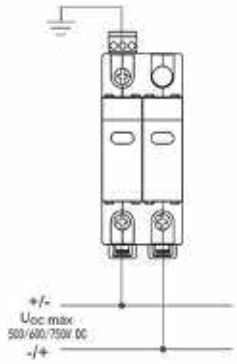

Ex9UEP1+2 6.25 2P
Ex9UEP1+2 6.25R 2P

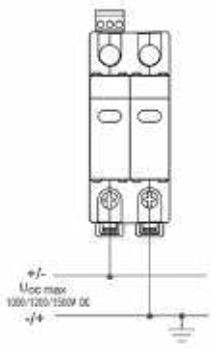

Ex9UEP1+2 6,25 2P
Ex9UEP1+2 6.25R 2P

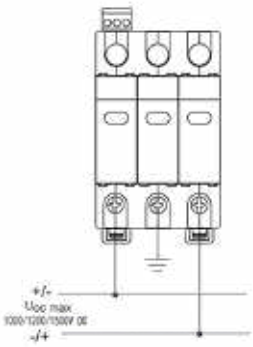

Ex9UEP1+2 6.25 3P
Ex9UEP1+2 6.25R 3P

Ordering information p. 80

Technical Data PHS

Plastic consumer units, IP65, surface mounted

General parameters

Consumer units for general and industrial applications
Surface mounted version
Scope of delivery: enclosure, door, device DIN rails, N + PE terminals, front cover with device cutout, cover for empty place, mounting material

Electrical parameters

Tested according to	EN 60670, EN 62208
Rated op. voltage U_n	400 V AC 1500 V DC
Rated current I_n	63 A
Rated frequency	50 Hz
Degree of protection	IP65
Protection class	II
Rated insulating voltage U_i	690 V AC 1500 V DC
Maximum power dissipation of all installed devices at ambient temperature 30 °C	
PHS 4T	10 W
PHS 6T	10 W
PHS 8T	13 W
PHS 12T	16 W
PHS 18T	20 W
PHS 24T	24 W
PHS 36T	26 W
PHS 48T	35 W

Mechanical parameters

Glow-wire test	650 °C
Mechanical impact resistance	IK08
Used plastics	Halogen-free
Body color	RAL7035
UV stable	Yes
Temperature	-25ºC – +60ºC
Material	Acrylonitrile acrylic styrene

Ordering information p. 84

Technical Data PHS

Plastic consumer units, IP65, surface mounted

Dimensional drawings

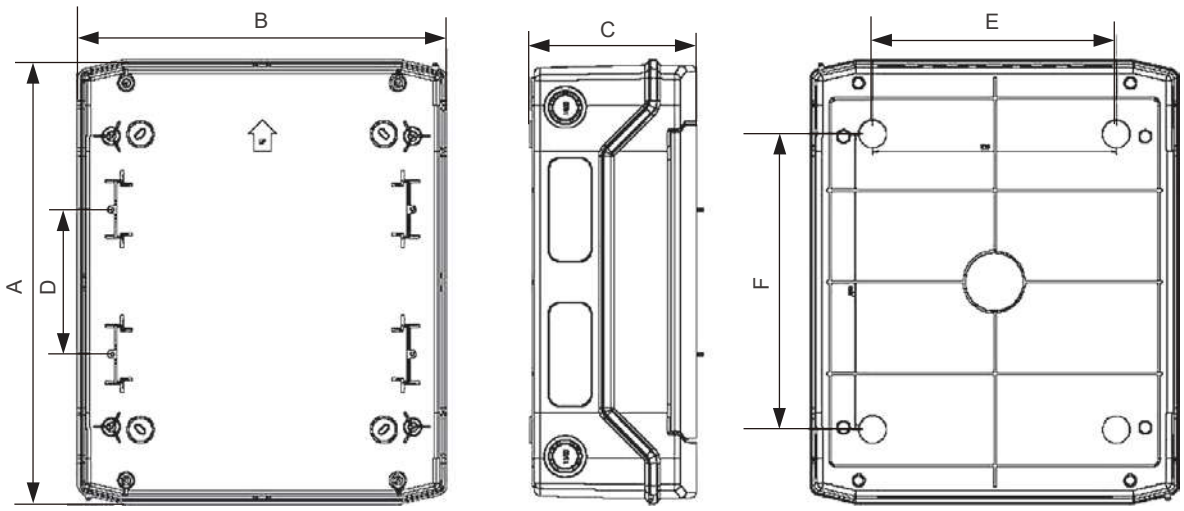

Dimensions

Type	Dimensions [mm]					
	A	B	C	D	E	F
PHS 4T	201	128	120	—	—	140
PHS 6T	201	165	118	—	63	140
PHS 8T	201	202	120	—	100	140
PHS 12T	259	319	144	—	210	130
PHS 18T	259	428	144	—	259	130
PHS 24T	384	319	144	125	210	255
PHS 36T	508	319	144	125	210	380
PHS 48T	664	319	144	125	210	505

Ordering information p. 84

Technical Data PHS FB

Plastic consumer units, IP65, surface mounted

General parameters

Consumer units for general and industrial applications
Surface mounted version
Flat bottom - without marked cutouts
Scope of delivery: enclosure, door, device DIN rails, N + PE terminals, front cover with device cutout, cover for empty place, mounting material

Electrical parameters

Tested according to	EN 60670, EN 62208
Rated op. voltage U_n	400 V AC 1500 V DC
Rated current I_n	63 A
Rated frequency	50 Hz
Degree of protection	IP65
Protection class	II
Rated insulating voltage U_i	690 V AC 1500 V DC
Maximum power dissipation of all installed devices at ambient temperature 30 °C	
PHS 4T FB	10 W
PHS 6T FB	10 W
PHS 8T FB	13 W
PHS 12T FB	16 W
PHS 18T FB	20 W
PHS 24T FB	24 W
PHS 36T FB	26 W
PHS 48T FB	35 W

Mechanical parameters

Glow-wire test	650 °C
Mechanical impact resistance	IK08
Used plastics	Halogen-free
Body color	RAL7035
UV stable	Yes
Temperature	-25ºC – +60ºC
Material	Acrylonitrile acrylic styrene

Ordering information p. 88

Technical Data PHS FB

Plastic consumer units, IP65, surface mounted

Dimensional drawings

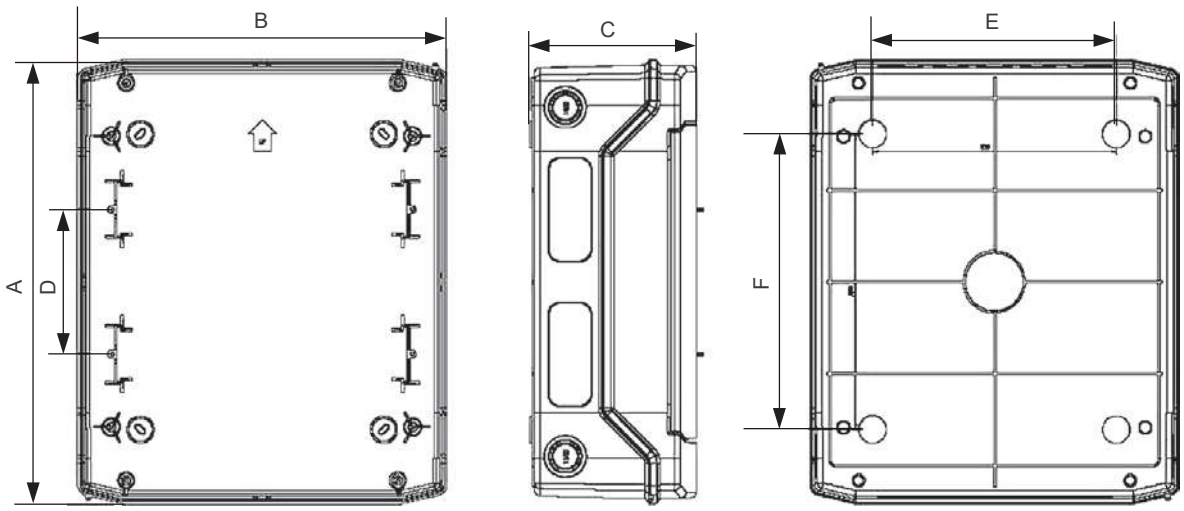

Dimensions

Type	Dimensions [mm]					
	A	B	C	D	E	F
PHS 4T FB	201	128	120	—	—	140
PHS 6T FB	201	165	118	—	63	140
PHS 8T FB	201	202	120	—	100	140
PHS 12T FB	259	319	144	—	210	130
PHS 18T FB	259	428	144	—	259	130
PHS 24T FB	384	319	144	125	210	255
PHS 36T FB	508	319	144	125	210	380
PHS 48T FB	664	319	144	125	210	505

Ordering information p. 88

Technical Data Ex9EV

EV charging wallboxes

General parameters

Static EV charging solution - installation directly on a wall
Charging current from 10 to 32 A
Integrated RCCB type B (Ex9LB63)
Information about setting and usage are in manual available at www.noark-electric.eu

Electrical parameters

	Ex9EV1 T1	Ex9EV1 T2	Ex9EV3 T2
Tested according to	IEC/EN 61851		
Rated operating voltage U_e	230 V AC ± 10%	230 V AC ± 10%	400 V AC ± 10%
Rated frequency f	50 / 60 Hz		
Maximal charging current I_{max}	10 / 16 / 20 / 25 / 32 A		
Maximal charging power P_{max}	2.3 / 3.7 / 4.6 / 5.8 / 7.4 kW		6.9 / 11.0 / 13.8 / 17.3 / 22.1 kW
Integrated RCCB			
sensitivity to residual current	B type - residual AC, pulsating and smooth DC current, high frequency (1 kHz)		
rated residual current $I_{\Delta n}$ (AC / DC)	30 mA / 6 mA		
Connection	inlet cable from superior switchboard		
Charging mode	mode 3		
Compatible network	TN-S		
Self consumption	< 10 W		

Mechanical parameters

Cable length	5 m		
Cable dimension	3 x 6 mm^2 + 2 x 0.5 mm^2		5 x 6 mm^2 + 2 x 0.5 mm^2
Recommended cross-section of inlet cable (10 / 16 / 20 / 25 / 32 A)	2.5 / 2.5 / 4 / 4 / 6 mm^2		
EV plugs	Type 1 / SAE J1772	Type 2 / IEC 62196-2	
Degree of protection			
wallbox	IP44		
plugs (when connected)	IP44		
Ambient temperature	-25 °C — +40 °C		
Altitude	≤ 2000 m		
Relative humidity	≤ 75 %		
Insulation class	II		
Weight	4.75 kg		6 kg

Ordering information p. 92

Technical Data Ex9EV

EV charging wallboxes

Dimensions

mm

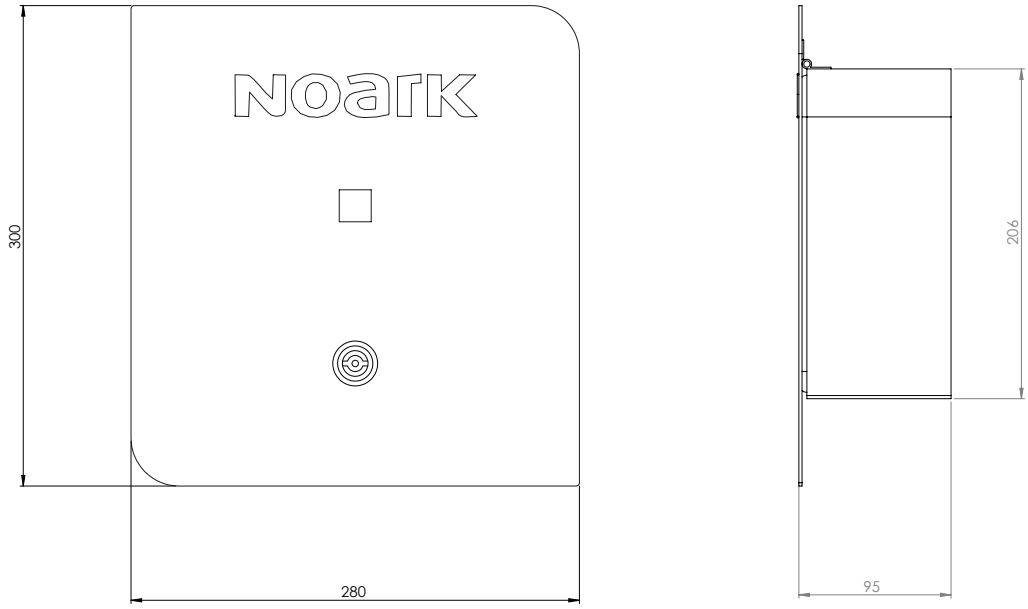

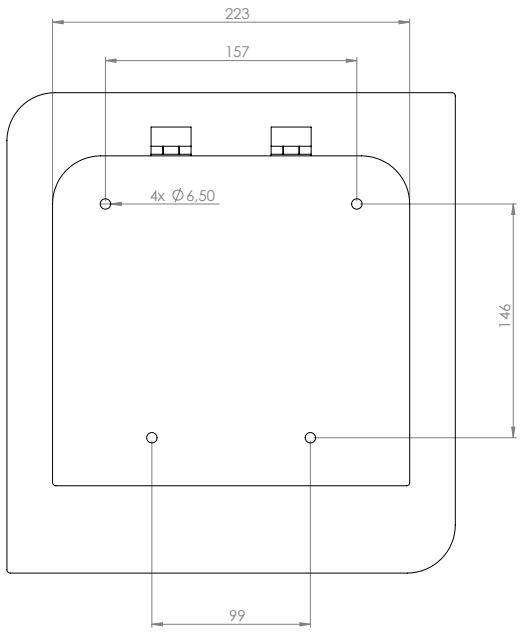

Ordering information p. 92

Technical Data Ex9EV

EV charging wallboxes

Wiring diagram

Ex9EV1 T1 / Ex9EV1 T2

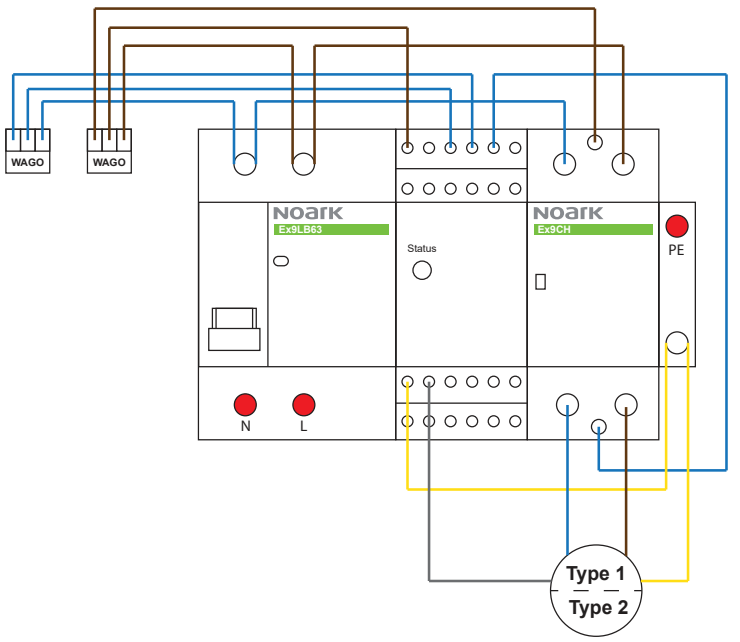

Ex9EV3 T2

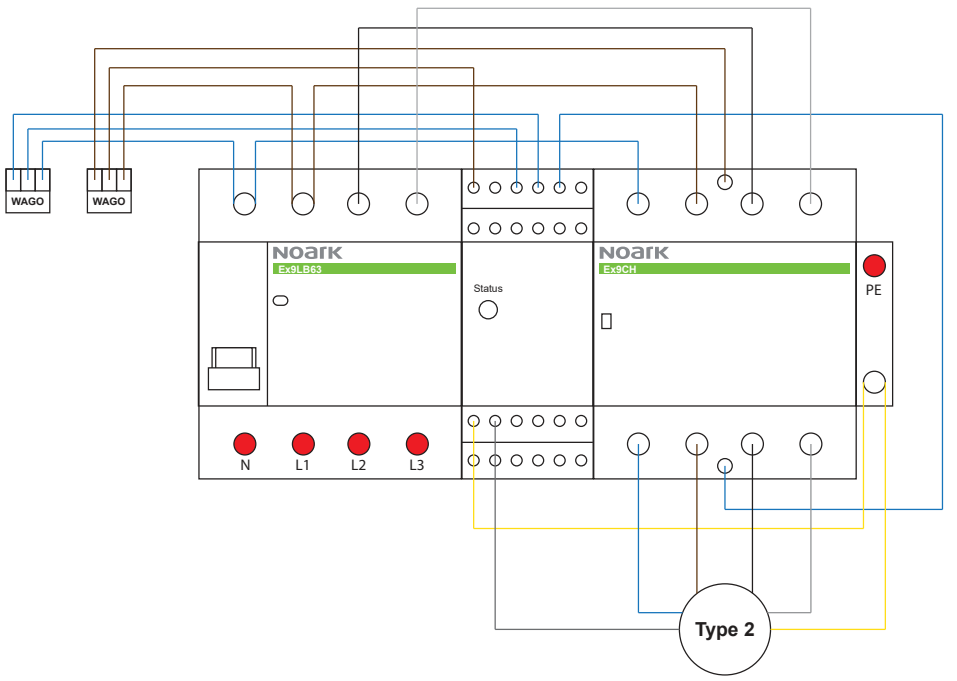

● inlet connection

Ordering information p. 92

Technical Data Ex9EVC

EV charging cables

General parameters

Mobile solution of EV charging
Adjustable charging current up to 13/16 or 32 A
Integrated RCCB type B
All necessary protections
temperature monitoring
overvoltage and undervoltage monitoring
automatically check the electronics before charging
check of ground and neutral connection before charging

Electrical parameters

	Ex9EVC1 T1 16A	Ex9EVC1 T2 16A (Ex9EVC1 T2 13A UK)	Ex9EVC1 T1 32A
Tested according to	IEC/EN 61851		
Rated operating voltage U_e	200 — 260 V AC		
Rated frequency f	50 / 60 Hz		
Maximal charging current I_{max}	16 A	16 A (13 A)	32 A
Adjusting steps of current	6 / 8 / 10 / 13 / 16 A	6 / 8 / 10 / 13 / 16 A (6 / 8 / 10 / 13 A)	10 / 13 / 16 / 25 / 32 A
Charging power per step	1.4 / 1.8 / 2.3 / 3.0 / 3.7 kW	1.4 / 1.8 / 2.3 / 3.0 / 3.7 kW (1.4 / 1.8 / 2.3 / 3.0 kW)	2.3 / 3.0 / 3.7 / 5.8 / 7.4 kW
Integrated RCCB			
sensitivity to residual current	B type - residual AC, pulsating and smooth DC current, high frequency (1 kHz)		
rated residual current $I_{\Delta n}$ (AC / DC)	30 mA / 6 mA		
Connection	directly to the grid plug and EV plug		
Charging mode	mode 2		
Compatible network	TN-S, IT		
Self consumption	< 1 W		

Mechanical parameters

Cable length	5 m		
Cable dimension	4 x 2.5 mm^2	4 x 2.5 mm^2	4 x 4 mm^2
Plugs			
car connection side	Type 1 / SAE J1772	Type 2 / IEC 62196-2	Type 1 / SAE J1772
grid connection side	UNISCHUKO	UNISCHUKO (Type G 13 A fused - UK)	CEE 32A/5p
Degree of protection			
cable and box	IP55		
plugs (when connected)	IP44		
Ambient temperature	-30 °C — +65 °C		
Insulation class	II		
Weight	2.5 kg	2.5 kg	3.1 kg

Ordering information p. 94

Technical Data Ex9EVC

EV charging cables

Electrical parameters

	Ex9EVC1 T2 32A	Ex9EVC3 T2 16A	Ex9EVC3 T2 32A
Tested according to	IEC/EN 61851		
Rated operating voltage U_e	200 — 260 V AC	380 — 440 V AC	
Rated frequency f	50 / 60 Hz		
Maximal charging current I_{max}	32 A	16 A	32 A
Adjusting steps of current	10 / 13 / 16 / 25 / 32 A	6 / 8 / 10 / 13 / 16 A	10 / 13 / 16 / 25 / 32 A
Charging power per step	2.3 / 3.0 / 3.7 / 5.8 / 7.4 kW	4.1 / 5.5 / 6.9 / 9.0 / 11.0 kW	6.9 / 9.0 / 11.0 / 17.3 / 22.1 kW
Integrated RCCB			
sensitivity to residual current	B type - residual AC, pulsating and smooth DC current, high frequency (1 kHz)		
rated residual current $I_{\Delta n}$ (AC / DC)	30 mA / 6 mA		
Connection	directly to the grid plug and EV plug		
Charging mode	mode 2		
Compatible network	TN-S, IT		
Self consumption	< 1 W		

Mechanical parameters

Cable length	5 m		
Cable dimension	4 x 4 mm^2	5 x 2.5 mm^2 + 0.75 mm^2	5 x 4 mm^2 + 0.75 mm^2
Plugs			
car connection side	Type 2 / IEC 62196-2		
grid connection side	CEE 32A/5p	CEE 16A/5p	CEE 32A/5p
Degree of protection			
cable and box	IP55		
plugs (when connected)	IP44		
Ambient temperature	-30 °C — +65 °C		
Insulation class	II		
Weight	3.1 kg	2.9 kg	3.9 kg

Ordering information p. 94

Index

Catalogues and assortment overview

INSTALLATION DEVICES

- Miniature Circuit Breakers
- Fuse Holders and Disconnectors
- Isolators
- Residual Current Devices
- Energy Meters
- Motor Protective Circuit Breakers
- Accessories for Installation Devices
- Surge Protection Device
- Installation Relays and Contactors
- Switches and Signal Lamps
- Timers and Light Intensity Switches
- Other Installation Devices

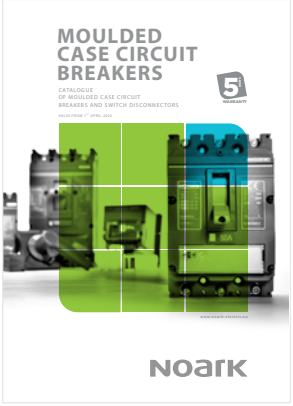

MOULDED CASE CIRCUIT BREAKERS

- AC Thermomagnetic Moulded Case Circuit Breakers Ex9M
- AC Electronic Moulded Case Circuit Breakers Ex9M SU20L (DIP switches version)
- AC Electronic Moulded Case Circuit Breakers Ex9M SU20S (LCD version)
- AC MCCB Switch Disconnectors Ex9MSD
- DC Thermomagnetic Moulded Case Circuit Breakers Ex9M
- DC MCCB Switch Disconnectors Ex9MSD
- Accessories for MCCBs

INDUSTRIAL DEVICES

- Contactors and Relays
- Motor Protective Circuit Breakers
- Overload Relays
- Accessories
- Panel Mounted Devices

Catalogues and assortment overview

CONSUMER UNITS

- Plastic Consumer Units
- Plastic Consumer Units with Sheet Steel Door
- Plastic Consumer Units for Outdoor Use
- Metal Flat Enclousures
- Metal Enclosures with Mounting Plates
- Interconnection Systems

PHOTOVOLTAIC COMPONENTS AND SOLUTIONS

- Miniature Circuit Breakers
- Fuse Disconnectors
- Isolators
- Surge Protection Devices
- Moulded Case Circuit Breakers and Switch Disconnectors
- EV chargers

AIR CIRCUIT BREAKERS

- Digital Tripping Units
- Air Circuit Breakers
- Air Switch Disconnectors
- Accessories

Subject to modifications!

Rev.20220401PK

NOARK Electric Europe s.r.o.
Sezemická 2757/2, 193 00 Prague 9, Czech Republic
Phone: +420 226 203 120
E-mail: Europe@noark-electric.com
www.noark-electric.eu

NOARK

8 592765 700889